STAR®

BUILDINGS

SuperLok®

Mechanically Seamed Roof System

Technical Installation Information

IMPORTANT NOTICE

READ THIS MANUAL COMPLETELY PRIOR TO BEGINNING THE INSTALLATION OF THE SUPERLOK® ROOFING SYSTEM. THE MANUFACTURER DETAILS MUST BE FOLLOWED AS A MINIMUM TO INSURE APPROPRIATE WARRANTIES WILL BE ISSUED.

ALWAYS INSPECT EACH AND EVERY PANEL AND ALL ACCESSORIES BEFORE INSTALLATION. NEVER INSTALL ANY PRODUCT IF ITS QUALITY IS IN QUESTION. NOTIFY MBCI IMMEDIATELY IF ANY PRODUCT IS BELIEVED TO BE OUT OF TOLERANCE, SPECIFICATION OR HAS BEEN DAMAGED DURING SHIPMENT.

IF THERE IS A CONFLICT BETWEEN PROJECT INSTALLATION DRAWINGS PROVIDED OR APPROVED BY THE MANUFACTURER AND DETAILS IN THIS MANUAL, PROJECT INSTALLATION DRAWINGS WILL TAKE PRECEDENCE.

Ice Dam Disclaimer

MBCI designs it's standing seam roofs to meet the load requirements dictated by governing codes and project specifications, including applicable snow loads. However, MBCI expressly disclaims responsibilty for weathertightness or roof point loading issues or other hazards resulting from ice dam situations. Any time ice and snow can melt on the main body of the roof and refreeze at the eave or in the shadow of an adjacent wall, an ice dam situation may develop. In addition to local climate, ice dam formation is affected by many other factors, including but not limited to, roof insulation R value, roof panel color, interior temperature of building, heater location in building, eave overhangs, parapet walls, shading of building roof areas from adjacent trees, parapets, buildings, etc. These factors are design and maintenance issues and are outside the control of MBCI. MBCI specifically disclaims any liability for damage due to ice dam formation, although the following issues should be taken into consideration concerning standing seam roofs installed in freezing climates:

- Always use field seamed panels. These machine-folded seams are more durable when subjected to occasional icing.
- Eliminate "cold" eave overhangs and parapet walls from the building design. Roof overhangs outside the heated envelope of the building will tend to be colder than the roof areas over the heated envelope. Simple roof designs are preferred. Parapet walls at the eave allow ice and snow to collect due to shading effects and the lower roof temperatures caused thereby.
- Make sure the interior of the building is adequately insulated and the heating is properly distributed. Inadequate insulation in the roof and/or improper heat distribution causes heat flow though the main body of the roof. On days when the temperature is below freezing, this heat gain can cause ice and snow to melt and refreeze at the eave where the roof is colder.
- Lay out the building to prevent the eaves and other roof areas from being shaded during the winter. This may mean eliminating adjacent trees or reconsidering roof geometries.
- Consider using self-regulating heating cables at the eaves to mitigate the effects of ice dams.
- On building designs using attics, over-insulate the attic floor and provide adequate ventilation in the attic. This will reduce heat transfer through the roof resulting in more consistent roof temperatures between eave and field of roof.
- Increase the degree of diligence with respect to underlayment materials at roof areas prone to icing. This may include valleys, eaves, dormers and roof areas near dormers, parapets and the like where shading may occur.

For more information on this subject, please refer to the MCA's Metal Roof Design For Cold Climates manual.

The Engineering data contained herein is for the expressed use of customers and design professionals. Along with this data, it is recommended that the design professional have a copy of the most current version of the North American Specification for the Design of Cold-Formed Steel Structural Members published by the American Iron and Steel Institute to facilitate design. This Specification contains the design criteria for cold-formed steel components. Along with the Specification, the designer should reference the most current building code applicable to the project jobsite in order to determine environmental loads. If further information or guidance regarding cold-formed design practices is desired, please contact the manufacturer

©Copyright NCI Group, Inc. All Rights Reserved. 10-2011

Descriptions and specifications contained herein were in effect at the time this publication was approved for printing. In a continuing effort to refine and improve products, MBCI reserves the right to discontinue products at any time or change specifications and/or designs without incurring obligation. **To ensure you have the latest information available, please inquire or visit our website at www.mbci.com.** Application details are for illustration purposes only and may not be appropriate for all environmental conditions, building designs or panel profiles. Projects should be designed to conform to applicable building codes, regulations and accepted industry practices. If there is a conflict between this manual and project erection drawings, the erection drawings will take precedence.

Houston, TX 877-713-6224
Adel, GA 888-446-6224
Atlanta, GA 877-512-6224
Atwater, CA 800-829-9324
Dallas, TX 800-653-6224
Indianapolis, IN 800-735-6224
Jackson, MS 800-622-4136
Lubbock, TX 800-758-6224
Memphis, TN 800-206-6224
Oklahoma City, OK 800-597-6224
Omaha, NE 800-458-6224
Phoenix, AZ 888-533-6224
Richmond, VA 800-729-6224
Rome, NY 800-559-6224
Salt Lake City, UT 800-874-2404
San Antonio, TX 800-598-6224

MBCI®
Metal Roof and Wall Systems

TABLE OF CONTENTS

ROOFING SYSTEM

General Description SL-3
Architect/Engineering Information SL-4

ENGINEERING

Read This First SL-5
UL 90 Requirements SL-6
ICBO Approval SL-6
12" Properties/Load Tables . . . . . SL-7 – SL-8
16" Properties/Load Tables . . . . . SL-9 – SL-10

GENERAL INFORMATION

Product Checklist . . . . . SL-11 – SL-16
Panel Orientation SL-17
Installation Guidelines SL-17
Preparatory Requirements SL-18
Unloading . . . . . SL-19 – SL-20
Handling/Panel Storage SL-21

INSTALLATION SEQUENCE

Step 1 — Rake Attachments SL-22
Step 2 — Low System Eave SL-23
Step 2A — High System Eave SL-24
Step 3 — Thermal Spacer (For High Systems Only) SL-25
Step 4 — First Panel SL-26
Step 5 — Clip Installation SL-27
Step 6 — Endlap SL-28
Step 7 — Ridge SL-29
Step 8 — Subsequent Runs Eave SL-30
Step 9 — Subsequent Runs Endlap SL-31
Step 10 — Subsequent Runs Ridge SL-32
Step 11 — Last Panel Run SL-33
Step 12 — Seaming Operation . . . . . SL-34 – SL-36
Step 13 — Outside Closure Installation SL-37

SPECIAL ERECTION TECHNIQUES

UL 90 Light Transmitting Panel Installation SL-38
Curb Installation . . . . . SL-39 – SL-55
Pipe Penetration Installation . . . . . SL-56 – SL-57

ARCHITECTURAL DETAIL

Open Framing

Fixed Eave With Gutter SL-58
Fixed Eave With Snow Gutter SL-59
Fixed Eave With Eave Trim SL-60
Floating Ridge SL-61
Floating Vented Ridge SL-62
Fixed Vented Eave SL-63
Rake SL-64
Parapet Rake SL-65
Floating High Side Eave SL-66
Parapet Floating High Side Eave SL-67
Fixed Valley. SL-68
Floating Hip. SL-69

TABLE OF CONTENTS

Wood Deck
Field Hemming Panel End SL-70
Endlap. SL-71
Floating Eave with Gutter SL-72
Floating Eave with Eave Trim SL-73
Fixed Ridge. SL-74
Fixed Vented Ridge SL-75
Rake. SL-76
Parapet Rake SL-77
Fixed High Side Eave SL-78
Parapet Fixed High Side Eave SL-79
Floating Valley SL-80
Fixed Hip SL-81
Rigid Insulation Over Metal Deck
Endlap SL-82
Floating Eave With Gutter SL-83
Floating Eave With Eave Trim SL-84
Fixed Ridge SL-85
Fixed Vented Ridge SL-86
Rake. SL-87
Parapet Rake SL-88
Fixed High Side Eave SL-89
Parapet Fixed High Side Eave SL-90
Floating Valley SL-91
Fixed Hip SL-92

GENERAL INFORMATION

Proper Handling, Storage and Maintenance of Painted and Galvalume Plus® Panels . . . . . SL-93 – SL-94

Houston, TX 877-713-6224
Adel, GA 888-446-6224
Atlanta, GA 877-512-6224
Atwater, CA 800-829-9324
Dallas, TX 800-653-6224
Indianapolis, IN 800-735-6224
Jackson, MS 800-622-4136
Lubbock, TX 800-758-6224
Memphis, TN 800-206-6224
Oklahoma City, OK 800-597-6224
Omaha, NE 800-458-6224
Phoenix, AZ 888-533-6224
Richmond, VA 800-729-6224
Rome, NY 800-559-6224
Salt Lake City, UT 800-874-2404
San Antonio, TX 800-598-6224

MBCI®
Metal Roof and Wall Systems

SuperLok® ROOFING SYSTEM

GENERAL DESCRIPTION

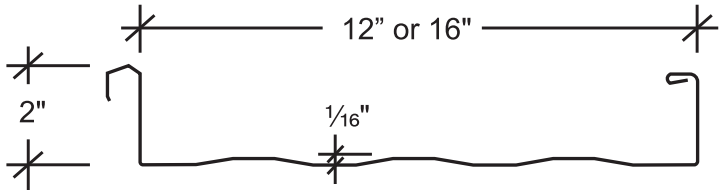

Coverage Width - 16" or 12"

Minimum Slope - 1/2:12

Panel Attachment - Low, High (Fixed or Floating) or Utility (No insulation clearance)

Panel Substrate - Galvalume® (standard)

Gauge - Standard: 24 ; Optional: 22

Finishes - Smooth Striated (standard)* or Embossed Striated

Coatings - Signature® 200, Signature® 300, Signature® 300 Metallic

PRODUCT SELECTION CHART

PRODUCT	Signature® 300 Metallic		Signature® 300		Signature® 200		Galvalume Plus®	
	24 Ga.	22 Ga.	24 Ga.	22 Ga.	24 Ga.	22 Ga.	24 Ga.	22 Ga.
SuperLok® HS								
16" Wide	■	■	■	■	■	■	●	■
12" Wide	■	■	■	■	■	■	●	■

Signature is a registered trademark of MBCI. Galvalume Plus is a registered trademark of BIEC International.

- ● — Available in any quantity.
- ■ — Minimum quantity may be required.

Other colors, finishes, gauges, and materials available; please inquire.
* Striated panels are standard to reduce “oil canning”.

CAUTION

Diaphragm capabilities and purlin stability are not provided by manufactures SuperLok® roof system. Therefore, other bracing may be required to conform to A.I.S.C. or A.I.S.I. specifications.

MBCI®
Metal Roof and Wall Systems

Houston, TX 877-713-6224
Adel, GA 888-446-6224
Atlanta, GA 877-512-6224
Atwater, CA 800-829-9324
Dallas, TX 800-653-6224
Indianapolis, IN 800-735-6224
Jackson, MS 800-622-4136
Lubbock, TX 800-758-6224
Memphis, TN 800-206-6224
Oklahoma City, OK 800-597-6224
Omaha, NE 800-458-6224
Phoenix, AZ 888-533-6224
Richmond, VA 800-729-6224
Rome, NY 800-559-6224
Salt Lake City, UT 800-874-2404
San Antonio, TX 800-598-6224

ROOFING SYSTEM SuperLok®

ARCHITECT/ENGINEER INFORMATION

1. **SuperLok**® is a mechanically seamed roof system. **SuperLok**® panels are available in 12" and 16" widths. Factory applied mastic inside of female leg of panel is standard.
2. **SuperLok**® is a structural roofing panel. This panel can be installed directly over purlins or bar joists. It does not require a solid substructure for support. The **SuperLok**® roof system has several different UL 90 construction numbers.
3. **SuperLok**® is recommended for roof slopes of ½:12 or greater.
4. Weathertight and aesthetically pleasing endlaps may be accomplished through the use of swaged and prepunched panels. **12" wide panels are not prepunched for endlaps**. The manufacturer provides a prepunched back-up plate at the endlap for weathertightness. Swaged endlaps require the roof erection to proceed from right to left as viewed from the eave looking toward the ridge. Roofs with no endlaps and less than 6:12 may be erected from either direction.
5. Heavier gauges, striations, embossing and installation over a solid deck minimize oil canning. Industry standard is a minimum 24 gauge material. Striations are standard to reduce oil canning. Oil canning is not a cause for rejection.
6. Substructure must be on an even plane from eave to ridge to avoid panel distortion (¼" in 20', ⅜" in 40' tolerance).
7. All panels require end sealant at eave and valley conditions; however, for illustration purposes, this sealant is not shown on all drawings.
8. For proper fastener application, see Product Checklist.
9. All perimeter trim dimensions in this manual are based on a wall panel thickness of 1¼" ("PBR" Panel). Any variation from this wall panel thickness may affect the perimeter trim dimensions.
10. The information in this manual is believed to be correct and accurate.
11. Drawings in this manual utilize the low fixed clip. Clips are available in low or high fixed, low or high floating and utility.
12. **Avoid restricting the thermal expansion and contraction of the SuperLok® panels. (ie: Do not attach panel to the substructure at both the eave and ridge.) However, panels must be attached to the substructure at one end to prevent their sliding downslope.**
13. **SuperLok® panels are not designed to be work platforms.** Avoid any unnecessary foot traffic on **SuperLok**® panels. If foot traffic is required, protect the roof panels by using soft soled shoes and some type of roof pad, temporary deck, or walkway.
14. **WARNING: Light transmitting panels are not designed or intended to bear the weight of any person walking, stepping, standing or resting on them. THE MANUFACTURER DISCLAIMS ANY WARRANTY OR REPRESENTATION, EXPRESS OR IMPLIED, that any person can safely walk, step, stand or rest on or near these light transmitting panels or that they comply with any OSHA regulation.**
15. A vapor retarder may be necessary to protect roofing components when high interior humidity is a factor. The need for a vapor retarder, as well as the type, placement and location should be determined by an architect or engineer. The following are examples of conditions that may require a vapor retarder: (A) Projects where outside winter temperatures below 40°F are anticipated and where average winter interior relative humidity of 45% or greater is expected. (B) Building usages with high humidity interiors, such as indoor swimming pools, textile manufacturing operations, food, paper or other wet-process industrial plants. (C) Construction elements that may release moisture after the roof is installed, such as interior concrete and masonry, plaster finishes and fuel burning heaters.
16. Typically, when wood decks are used, they are temporarily protected by the installation of a moisture barrier over the wood deck. If utility clips are to be used, the **SuperLok**® panel will lay tight to the wood deck. If tin tabs are used to attach the moisture barrier to the deck, they must be covered with duct tape or some other material to prevent them from rusting the back side of the panels. Also, plastic washers may "telegraph" through the panels.
17. Field cutting of the panels should be avoided where possible. If field cutting is required, the panels must be cut with nibblers, snips, or shears to prevent edge rusting. **Do not cut the panels with saws, abrasive blades, grinders, or torches.**

Houston, TX 877-713-6224
Adel, GA 888-446-6224
Atlanta, GA 877-512-6224
Atwater, CA 800-829-9324
Dallas, TX 800-653-6224
Indianapolis, IN 800-735-6224
Jackson, MS 800-622-4136
Lubbock, TX 800-758-6224
Memphis, TN 800-206-6224
Oklahoma City, OK 800-597-6224
Omaha, NE 800-458-6224
Phoenix, AZ 888-533-6224
Richmond, VA 800-729-6224
Rome, NY 800-559-6224
Salt Lake City, UT 800-874-2404
San Antonio, TX 800-598-6224

MBCI®
Metal Roof and Wall Systems

SuperLok® ENGINEERING

IMPORTANT
READ THIS FIRST

CAUTION

Application and design details are for illustration purposes only, and may not be appropriate for all environmental conditions or building designs. Projects should be engineered to conform to applicable building codes, regulations, and accepted industry practices.

CAUTION

The use of any field seaming machine other than that provided by the manufacturer will damage the panels and void all warranties.

Low Floating System - With or without ⅜" thermal spacer. **See Insulation/Thermal Spacer Selection Chart below.**

High Floating System - With ⅜", ⅝" or 1" thermal spacer. **See Insulation/Thermal Spacer Selection Chart below.**

Thermal calculations should be performed for each project to ensure that the thermal movement of the roof is not greater than the floating clip's capacity. Various densities of blanket insulation may affect the installation and or the appearance of a metal roof system. The installer is responsible for selecting the proper clip and thermal spacer for their conditions.

Insulation/Thermal Spacer Selection Chart		
Insulation Thickness	**Low System**	**High System**
No Insulation	⅜" Thermal Spacer	High System Not Recommended
3" Insulation	Thermal Spacer Not Recommended	⅝" Thermal Spacer
4" Insulation	Thermal Spacer Not Recommended	⅜" Thermal Spacer
6" Insulation	Low System Not Recommended	Thermal Spacer Not Recommended

NOTES:

1. As with all standing seam roof systems, sound attenuation (example: blanket insulation) is required between the panel and the substructure to prevent "roof rumble" during windy conditions. **Some composite roof systems may require additional acoustical consideration to ensure that thermal vibration noises are isolated from the building interior. Contact your architect and/or engineer for proper acoustical design.**

Thermal Spacer Disclaimer

The above thermal spacer chart is intended to be used as a general guideline only. Because of the various densities of insulation currently available, the manufacturer cannot guarantee that this chart will be accurate in all situations. Further, the manufacturer does not specifically require that the roofing contractor use thermal spacers with it's **SuperLok®** roof system. However, please review the following information:

- Although the manufacturer does not require a thermal spacer, the architect or building owner may.
- In certain environments, the compression of the fiberglass insulation, without a thermal spacer, may create a thermal break which can cause condensation to form on the purlins/joists.
- On uninsulated buildings, eliminating the thermal spacer: (1) may cause "roof rumble" and (2) you may encounter problems holding panel module.
- When a high clip is used without a thermal spacer: (1) you may encounter problems holding panel module and (2) foot traffic on the panel ribs may result in bent clips.
- Using a low clip with too much insulation or too thick of a thermal spacer: (1) may cause "purlin read" (2) may cause difficulty in properly installing the panel side laps, and (3) you may encounter problems holding panel module.

MBCI®
Metal Roof and Wall Systems

Houston, TX 877-713-6224
Adel, GA 888-446-6224
Atlanta, GA 877-512-6224
Atwater, CA 800-829-9324
Dallas, TX 800-653-6224
Indianapolis, IN 800-735-6224
Jackson, MS 800-622-4136
Lubbock, TX 800-758-6224
Memphis, TN 800-206-6224
Oklahoma City, OK 800-597-6224
Omaha, NE 800-458-6224
Phoenix, AZ 888-533-6224
Richmond, VA 800-729-6224
Rome, NY 800-559-6224
Salt Lake City, UT 800-874-2404
San Antonio, TX 800-598-6224

UNDERWRITERS LABORATORIES APPROVAL
SuperLok®

Construction Number	Panel Width (In.)	Gauge	Clip Type	Clip Spacing	Substrate	UL-2218 Impact Resistance	UL-263 Fire Rating	UL-580 Rating
90	16"	24 min.	*	5'-0 1⁄16"	Open Framing	Class 4	Class A	Class 90
176	16"	24 min.	N/A	5'-0 ¼"	Open Framing	Class 4	Class A	Class 90
180	16"	24 min.	**	5'-0 ¼"	Open Framing	Class 4	Class A	Class 90
238B	16"	24 min.	**	2'-6"	Composite System	Class 4	Class A	Class 90
437	16"	24 min.	**	5'-0"	Plywood	Class 4	Class A	Class 90
449	16"	24 min.	*	5'-0"	Open Framing	Class 4	Class A	Class 90
451	16"	24 min.	*	2'-0"	Composite System	Class 4	Class A	Class 90
452	16"	24 min.	*	2'-0"	Composite System	Class 4	Class A	Class 90
487	16"	24 min.	**	4'-0"	Composite System	Class 4	Class A	Class 90

* Fixed or Floating (high or low)
** Fixed or Floating (high, low, or utility)

NOTES:

1. Tests procedures are in accordance with Underwriters Laboratories Standard UL-580 under “Tests For Uplift Resistance of Roof Assemblies".
2. A detailed installation method is available for each Construction Number above and can be found in the UL Roofing Materials and Systems Directory. The panels must be installed in a certain manner to achieve the published results.
3. The panel qualifies for a Class A fire rating in compliance with Underwriters Laboratories Standard UL-263 when installed over a non-combustible substrate. A Class C fire rating can be obtained over a combustible deck.
4. The panel system qualifies under the following Fire Resistance Design Numbers: P225, P227, P230, P237, P265, P268, P508, P510, P512, P701, P711, P717, P720, P722, P726, P731, P734, P736, P801, P815, and P819.
   Refer to the UL Fire Resistance Directory for specific construction methods and hourly ratings.
5. **SuperLok**® panels carry a Class 4 rating under UL-2218 "Test Standard For Impact Resistance".

ICBO APPROVAL

SuperLok® roofing system details, engineering calculations, computer printouts and data have been examined by the ICBO Evaluation Service, Inc. and have been found to comply with the 1997 Uniform Building Code.

SuperLok® is a registered trademark of NCI Building Systems, L.P.
Galvalume® is a registered trademark of BIEC International, Inc.
Vise-Grip® is a registered trademark of American Tool Companies, Inc.

Houston, TX 877-713-6224
Adel, GA 888-446-6224
Atlanta, GA 877-512-6224
Atwater, CA 800-829-9324
Dallas, TX 800-653-6224
Indianapolis, IN 800-735-6224
Jackson, MS 800-622-4136
Lubbock, TX 800-758-6224
Memphis, TN 800-206-6224
Oklahoma City, OK 800-597-6224
Omaha, NE 800-458-6224
Phoenix, AZ 888-533-6224
Richmond, VA 800-729-6224
Rome, NY 800-559-6224
Salt Lake City, UT 800-874-2404
San Antonio, TX 800-598-6224

MBCI®
Metal Roof and Wall Systems

SuperLok®

ENGINEERING

SuperLok® Panel

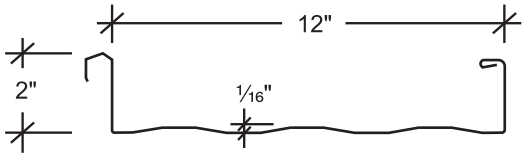

SECTION PROPERTIES								
			NEGATIVE BENDING			POSITIVE BENDING		
PANEL GAUGE	Fy (KSI)	WEIGHT (PSF)	Ixe (IN.4/FT.)	Sxe (IN.3/FT.)	Maxo (KIP-IN.)	Ixe (IN.4/FT.)	Sxe (IN.3/FT.)	Maxo (KIP-IN.)
24	50	1.47	0.0755	0.0712	2.1317	0.1660	0.1019	3.0507
22	50	1.83	0.1058	0.1030	3.0839	0.2240	0.1393	4.1717

NOTES:

1. All calculations for the properties of **SuperLok**® panels are calculated in accordance with the 2001 edition of the *North American Specification For Design Of Cold-Formed Steel Structural Members*.
2. Ixe is for deflection determination.
3. Sxe is for bending.
4. Maxo is allowable bending moment.
5. All values are for the one foot of panel width.

The engineering data contained herein is for the expressed use of customers and design professionals. Along with this data, it is recommended that the design professional have a copy of the most current version of the *North American Specification for the Design of Cold-Formed Steel Structural Members p*ublished by the American Iron and Steel Institute to facilitate design. This Specification contains the design criteria for cold-formed steel components. Along with the Specification, the designer should reference the most current building code applicable to the project jobsite in order to determine environmental loads. If further information or guidance regarding cold-formed design practices is desired, please contact the manufacturer.

MBCI®
Metal Roof and Wall Systems

Houston, TX 877-713-6224
Adel, GA 888-446-6224
Atlanta, GA 877-512-6224
Atwater, CA 800-829-9324
Dallas, TX 800-653-6224
Indianapolis, IN 800-735-6224
Jackson, MS 800-622-4136
Lubbock, TX 800-758-6224
Memphis, TN 800-206-6224
Oklahoma City, OK 800-597-6224
Omaha, NE 800-458-6224
Phoenix, AZ 888-533-6224
Richmond, VA 800-729-6224
Rome, NY 800-559-6224
Salt Lake City, UT 800-874-2404
San Antonio, TX 800-598-6224

SuperLok® Panel

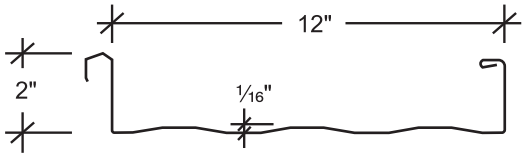

ALLOWABLE UNIFORM LOADS IN POUNDS PER SQUARE FOOT

24 Gauge (Fy = 50 KSI)								
SPAN TYPE	LOAD TYPE	SPAN IN FEET						
		2.5	3.0	3.5	4.0	4.5	5.0	5.5
SINGLE	LIVE	216.0	180.0	154.3	127.1	100.4	81.4	67.2
2-SPAN	LIVE	216.0	157.9	116.0	88.8	70.2	56.8	47.0
3-SPAN	LIVE	216.0	180.0	145.0	111.0	87.7	71.1	58.7
4-SPAN	LIVE	216.0	180.0	135.4	103.7	81.9	66.3	54.8

22 Gauge (Fy = 50 KSI)								
SPAN TYPE	LOAD TYPE	SPAN IN FEET						
		2.5	3.0	3.5	4.0	4.5	5.0	5.5
SINGLE	LIVE	313.0	260.8	223.6	173.8	137.3	111.2	91.9
2-SPAN	LIVE	313.0	228.4	167.8	128.5	101.5	82.2	68.0
3-SPAN	LIVE	313.0	260.8	209.8	160.6	126.9	102.8	85.0
4-SPAN	LIVE	313.0	260.8	195.9	150.0	118.5	96.0	79.3

NOTES:

1. Allowable loads are based on uniform span lengths and Fy = 50 ksi.
2. LIVE LOAD is limited by bending, shear, combined shear & bending.
3. Above loads consider a maximum deflection ratio of L/180.
4. The weight of the panel has not been deducted from the allowable loads.
5. **THE ABOVE LOADS ARE NOT FOR USE WHEN DESIGNING PANELS TO RESIST WIND UPLIFT.**
6. Please contact manufacturer or manufacturer's website for most current allowable wind uplift loads.
7. The use of any field seaming machine other than that provided by the manufacturer may damage the panels, void all warranties and will void all engineering data.

The engineering data contained herein is for the expressed use of customers and design professionals. Along with this data, it is recommended that the design professional have a copy of the most current version of the *North American Specification for the Design of Cold-Formed Steel Structural Members p*ublished by the American Iron and Steel Institute to facilitate design. This Specification contains the design criteria for cold-formed steel components. Along with the Specification, the designer should reference the most current building code applicable to the project jobsite in order to determine environmental loads. If further information or guidance regarding cold-formed design practices is desired, please contact the manufacturer.

Houston, TX 877-713-6224
Adel, GA 888-446-6224
Atlanta, GA 877-512-6224
Atwater, CA 800-829-9324
Dallas, TX 800-653-6224
Indianapolis, IN 800-735-6224
Jackson, MS 800-622-4136
Lubbock, TX 800-758-6224
Memphis, TN 800-206-6224
Oklahoma City, OK 800-597-6224
Omaha, NE 800-458-6224
Phoenix, AZ 888-533-6224
Richmond, VA 800-729-6224
Rome, NY 800-559-6224
Salt Lake City, UT 800-874-2404
San Antonio, TX 800-598-6224

MBCI®
Metal Roof and Wall Systems

SuperLok® Panel

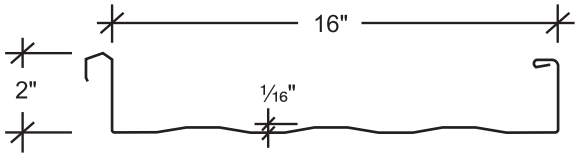

SECTION PROPERTIES								
			NEGATIVE BENDING			POSITIVE BENDING		
PANEL GAUGE	Fy (KSI)	WEIGHT (PSF)	Ixe (IN.4/FT.)	Sxe (IN.3/FT.)	Maxo (KIP-IN.)	Ixe (IN.4/FT.)	Sxe (IN.3/FT.)	Maxo (KIP-IN.)
24	50	1.38	0.0574	0.0538	1.6096	0.1324	0.0779	2.3301
22	50	1.72	0.0801	0.0779	2.3324	0.1787	0.1061	3.1772

NOTES:

1. All calculations for the properties of **SuperLok**® panels are calculated in accordance with the 2001 edition of the *North American Specification For Design Of Cold-Formed Steel Structural Members*.
2. Ixe is for deflection determination.
3. Sxe is for bending.
4. Maxo is allowable bending moment.
5. All values are for the one foot of panel width.

The engineering data contained herein is for the expressed use of customers and design professionals. Along with this data, it is recommended that the design professional have a copy of the most current version of the *North American Specification for the Design of Cold-Formed Steel Structural Members p*ublished by the American Iron and Steel Institute to facilitate design. This Specification contains the design criteria for cold-formed steel components. Along with the Specification, the designer should reference the most current building code applicable to the project jobsite in order to determine environmental loads. If further information or guidance regarding cold-formed design practices is desired, please contact the manufacturer.

MBCI®
Metal Roof and Wall Systems

Houston, TX 877-713-6224
Adel, GA 888-446-6224
Atlanta, GA 877-512-6224
Atwater, CA 800-829-9324
Dallas, TX 800-653-6224
Indianapolis, IN 800-735-6224
Jackson, MS 800-622-4136
Lubbock, TX 800-758-6224
Memphis, TN 800-206-6224
Oklahoma City, OK 800-597-6224
Omaha, NE 800-458-6224
Phoenix, AZ 888-533-6224
Richmond, VA 800-729-6224
Rome, NY 800-559-6224
Salt Lake City, UT 800-874-2404
San Antonio, TX 800-598-6224

ENGINEERING

SuperLok® Panel

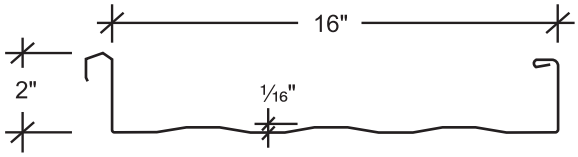

ALLOWABLE UNIFORM LOADS IN POUNDS PER SQUARE FOOT

24 Gauge (Fy = 50 KSI)

SPAN TYPE	LOAD TYPE	SPAN IN FEET						
		2.5	3.0	3.5	4.0	4.5	5.0	5.5
SINGLE	LIVE	162.0	135.0	115.7	97.1	76.7	62.1	51.4
2-SPAN	LIVE	162.0	119.2	87.6	67.1	53.0	42.9	35.5
3-SPAN	LIVE	162.0	135.0	109.5	83.8	66.2	53.7	44.3
4-SPAN	LIVE	162.0	135.0	102.2	78.3	61.8	50.1	41.4

22 Gauge (Fy = 50 KSI)

SPAN TYPE	LOAD TYPE	SPAN IN FEET						
		2.5	3.0	3.5	4.0	4.5	5.0	5.5
SINGLE	LIVE	233.4	194.5	166.7	132.4	104.6	84.7	70.0
2-SPAN	LIVE	233.4	172.8	126.9	97.2	76.8	62.2	51.4
3-SPAN	LIVE	233.4	194.5	158.7	121.5	96.0	77.7	64.3
4-SPAN	LIVE	233.4	194.5	148.1	113.4	89.6	72.6	60.0

NOTES:

1 Allowable loads are based on uniform span lengths and Fy = 50 ksi.
2 LIVE LOAD is limited by bending, shear, combined shear & bending.
3 Above loads consider a maximum deflection ratio of L/180.
4 The weight of the panel has not been deducted from the allowable loads.
5 **THE ABOVE LOADS ARE NOT FOR USE WHEN DESIGNING PANELS TO RESIST WIND UPLIFT**.
6 Please contact manufacturer or manufacturer's website for most current allowable wind uplift loads.
7 The use of any field seaming machine other than that provided by the manufacturer may damage the panels, void all warranties and will void all engineering data.

The engineering data contained herein is for the expressed use of customers and design professionals. Along with this data, it is recommended that the design professional have a copy of the most current version of the *North American Specification for the Design of Cold-Formed Steel Structural Members p*ublished by the American Iron and Steel Institute to facilitate design. This Specification contains the design criteria for cold-formed steel components. Along with the Specification, the designer should reference the most current building code applicable to the project jobsite in order to determine environmental loads. If further information or guidance regarding cold-formed design practices is desired, please contact the manufacturer.

Houston, TX 877-713-6224
Adel, GA 888-446-6224
Atlanta, GA 877-512-6224
Atwater, CA 800-829-9324
Dallas, TX 800-653-6224
Indianapolis, IN 800-735-6224
Jackson, MS 800-622-4136
Lubbock, TX 800-758-6224
Memphis, TN 800-206-6224
Oklahoma City, OK 800-597-6224
Omaha, NE 800-458-6224
Phoenix, AZ 888-533-6224
Richmond, VA 800-729-6224
Rome, NY 800-559-6224
Salt Lake City, UT 800-874-2404
San Antonio, TX 800-598-6224

MBCI®
Metal Roof and Wall Systems

SuperLok® GENERAL INFORMATION

PRODUCT CHECKLIST

SuperLok® Panel

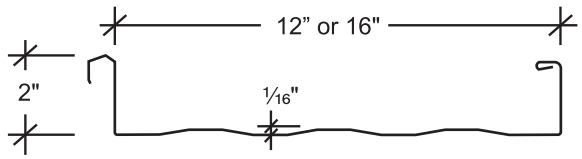

12" ☐
16" ☐

Clip, Floating

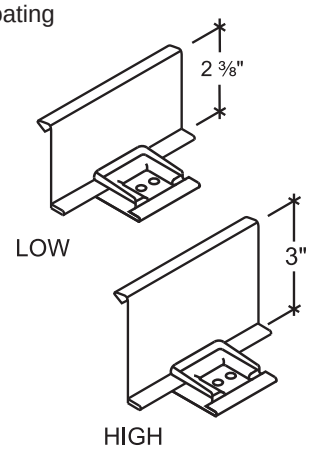

- Low – For use with or without 3/8" thermal spacer.

HW-230 ☐

- High – For use with 3/8", 5/8" or 1" thermal spacer.

HW-232 ☐

Clip, Fixed

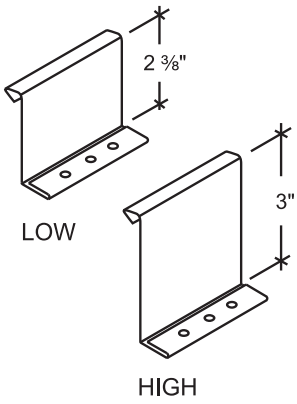

- Low – For use with or without 3/8" thermal spacer

HW-236 ☐

- High – For use with 3/8", 5/8" or 1" thermal spacer

HW-234 ☐

Clip, Utility

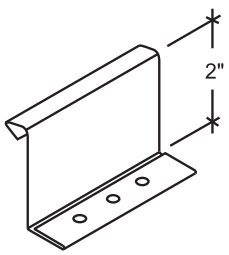

- For applications that do not require the clearance provided by the low and high clips.

HW-238 ☐

Back-Up Plate

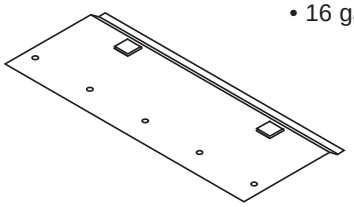

- For use at ridge and endlaps
- Prepunched
- 16 gauge red oxide

12" Wide HW-7764 ☐
16" Wide HW-7766 ☐

Rake Support

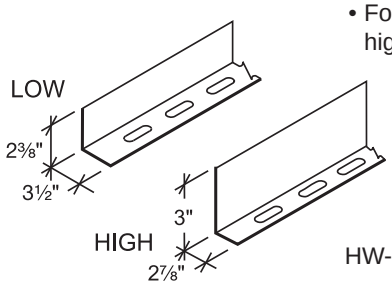

- 20'-0" length
- 14 gauge red oxide
- Factory slots
- For use with low or high clip

HW-7712 - Low ☐
HW-7222 - High ☐

Rake Support Utility

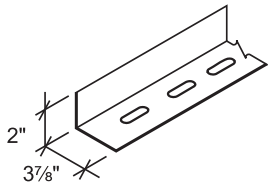

- 20'-0" length
- 14 gauge red oxide
- Factory slots
- For use with utility clip

HW-7732 ☐

Bearing Plate Standard

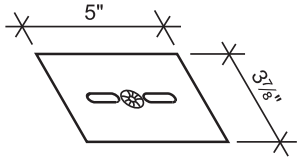

- 16 gauge red oxide
- For use with low or utility systems
- For use with rigid board insulation

HW-7500 ☐

GENERAL INFORMATION

SuperLok®

PRODUCT CHECKLIST

Eave Plate, Low

- 8'-0" length
- 14 gauge
- Red Oxide

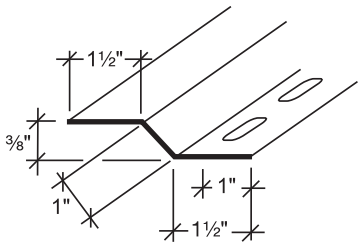

HW-7600 ☐

Eave Plate, High

- 8'-0" length
- 14 gauge
- Red Oxide

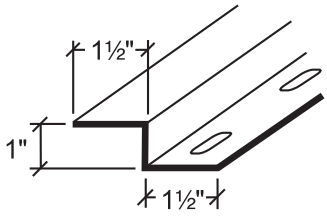

HW-7616 ☐

Floating Eave Plate, Low

- 8'-0" length
- 14 gauge
- Red Oxide

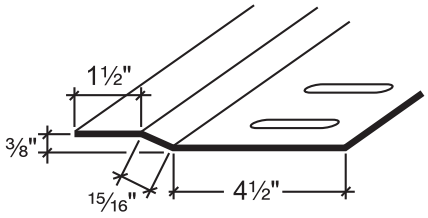

HW-7617 ☐

Floating Eave Plate, High

- 8'-0" length
- 14 gauge
- Red Oxide

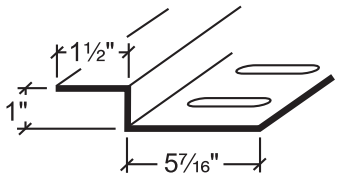

HW-7618 ☐

Mid-Slope Fixed Plate, Low

- 14 gauge
- Red Oxide

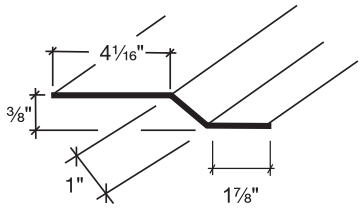

HW-7630 (10'-0" Long) ☐
HW-7631 (20'-0" Long) ☐

Mid-Slope Fixed Plate, High

- 14 gauge
- Red Oxide

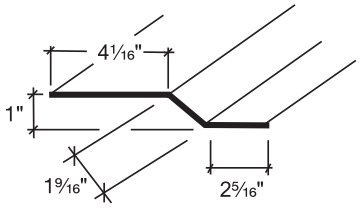

HW-7638 (10'-0" Long) ☐
HW-7639 (20'-0" Long) ☐

Houston, TX 877-713-6224
Adel, GA 888-446-6224
Atlanta, GA 877-512-6224
Atwater, CA 800-829-9324
Dallas, TX 800-653-6224
Indianapolis, IN 800-735-6224
Jackson, MS 800-622-4136
Lubbock, TX 800-758-6224
Memphis, TN 800-206-6224
Oklahoma City, OK 800-597-6224
Omaha, NE 800-458-6224
Phoenix, AZ 888-533-6224
Richmond, VA 800-729-6224
Rome, NY 800-559-6224
Salt Lake City, UT 800-874-2404
San Antonio, TX 800-598-6224

MBCI®
Metal Roof and Wall Systems

SuperLok® GENERAL INFORMATION

PRODUCT CHECKLIST

Valley Support Plate – Low or Utility Systems

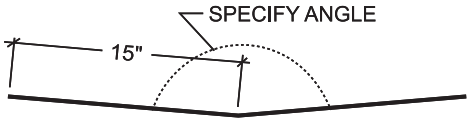

• Use Over Solid Substrate 10'-0" P-105 ☐

Extended Valley Support Plate – Low or Utility Systems

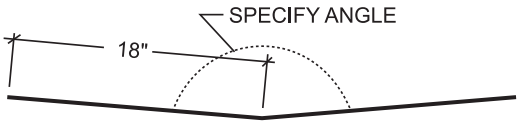

• Use Over Solid Substrate 10'-0" P-115 ☐

Valley Support Plate – High Systems

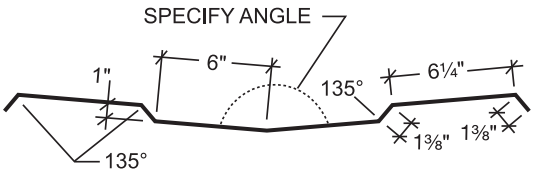

10'-0" P-125 ☐

Extended Valley Support Plate – High Systems - Extended

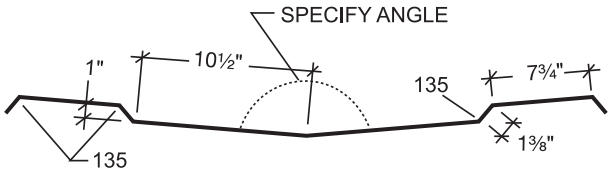

10'-0" P-135 ☐

Hip Support Plate – High Fixed Systems

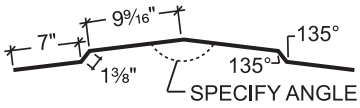

10'-0" P-155 ☐

Hip Support Plate –High or Low Floating Systems

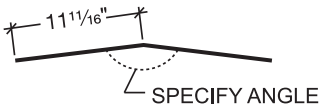

• Use Over Solid Substrate 10'-0" P-140 ☐

Hip Support Plate – Low Fixed Systems

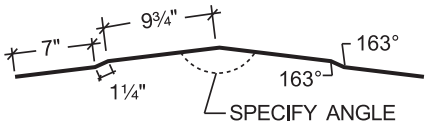

10'-0" P-145 ☐

MBCI®
Metal Roof and Wall Systems

Houston, TX 877-713-6224
Adel, GA 888-446-6224
Atlanta, GA 877-512-6224
Atwater, CA 800-829-9324
Dallas, TX 800-653-6224
Indianapolis, IN 800-735-6224
Jackson, MS 800-622-4136
Lubbock, TX 800-758-6224
Memphis, TN 800-206-6224
Oklahoma City, OK 800-597-6224
Omaha, NE 800-458-6224
Phoenix, AZ 888-533-6224
Richmond, VA 800-729-6224
Rome, NY 800-559-6224
Salt Lake City, UT 800-874-2404
San Antonio, TX 800-598-6224

GENERAL INFORMATION

SuperLok®

PRODUCT CHECKLIST

Tape Sealer-Swaged

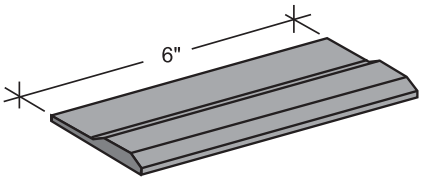

HW-515 ☐

Thermal Spacer
- Polystyrene block used to increase the insulation capacity along the purlins

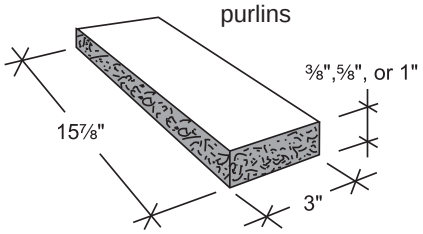

HW-583 3/8" ☐
HW-582 5/8" ☐
HW-581 1" ☐

Outside Closure
- 24 gauge
- Painted
- 12" wide
- 16" wide

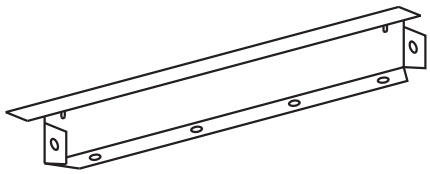

12" wide HW-446 ☐
16" wide HW-440 ☐

Tri-Bead Tape Sealer

- 3/16" x 7/8" x 25'
- For use at eave, ridge, endlaps and trim connections

HW-504 ☐

Triple Bead Tape Sealer

- 3/16" x 2 7/8" x 20'
- For use at valley when using exposed fasteners
- For use with roof curbs

HW-502 ☐

Panel Hemming Tool

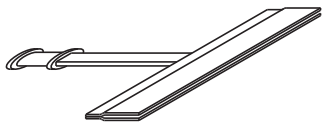

HW-602 ☐

Tube Sealant
- Urethane

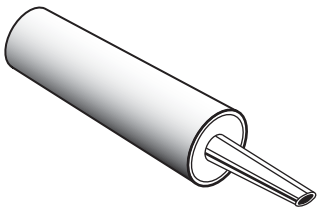

(White) - HW-540 ☐
(Gray) - HW-541 ☐
(Bronze) - HW-542 ☐

Metal Vent Material
- 8'-0" length
- 24 Gauge Galvalume®

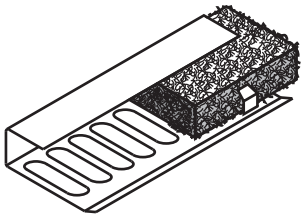

HW-525 ☐

Gutter Strap
- For use with Sculptured Gutter

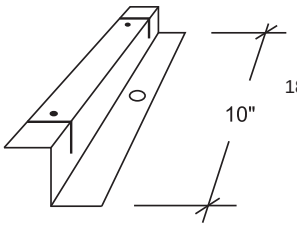

18 Gauge Material
FL246 ☐

- For use with Box Gutter

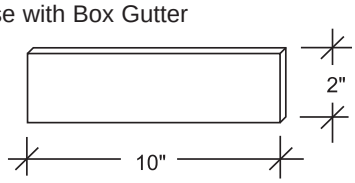

24 Gauge Material
FL310 ☐

Light Transmitting Panel (Reinforced) ‡

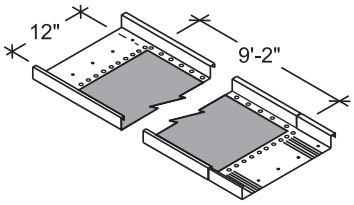

- Std. Insulated - HW- 1621S ☐
- Std. Uninsulated - HW-1620S ☐
- UL 90 Insulated - HW-1617S ☐
- UL 90 Uninsulated - HW-1616S ☐

‡ It is the user's responsibility to ensure that the installation and use of all light transmitting panels comply with State, Federal and OSHA regulations and laws, including, but not limited to, guarding all light transmitting panels with screens, fixed standard railings, or other acceptable safety controls that prevent fall-through.

Houston, TX 877-713-6224
Adel, GA 888-446-6224
Atlanta, GA 877-512-6224
Atwater, CA 800-829-9324
Dallas, TX 800-653-6224
Indianapolis, IN 800-735-6224
Jackson, MS 800-622-4136
Lubbock, TX 800-758-6224
Memphis, TN 800-206-6224
Oklahoma City, OK 800-597-6224
Omaha, NE 800-458-6224
Phoenix, AZ 888-533-6224
Richmond, VA 800-729-6224
Rome, NY 800-559-6224
Salt Lake City, UT 800-874-2404
San Antonio, TX 800-598-6224

MBCI®
Metal Roof and Wall Systems

SuperLok® GENERAL INFORMATION

PRODUCT CHECKLIST

Fastener #1B

- Clip to purlin (Up to 4" insulation between panel and purlin)

¼"-14 x 1¼" Driller
5⁄16" Hex Washer Head with no washer ☐

Fastener #1E

- Panel to eave plate or eave strut
- Rake trim to roof panel
- Standard endlaps
- Panel to valley plate

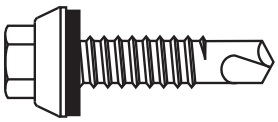

¼"-14 x 1¼" Long Life Driller
5⁄16" Hex Washer Head, with sealing washer ☐

Fastener #2A

- Use in place of Fasteners #1E, #2B and #4 at all strip outs

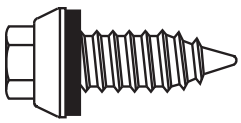

17 x 1" Long Life AB
5⁄16" Hex Washer Head, with sealing washer ☐

Fastener #2B

- Endlap over plywood

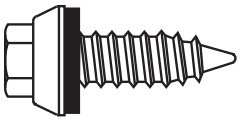

¼"-14 x 1" Long Life AB
3⁄8" Hex Washer Head, with sealing washer ☐

Fastener #4

- Ridge and other flashing to outside closure
- Gutter to panel
- Gutter to strap
- Trim to trim connections
- Sculptured eave trim to panel

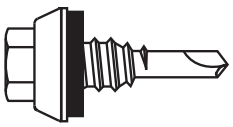

¼"-14 x 7⁄8" Long Life Lap Tek® Driller
5⁄16" Hex Washer Head, with sealing washer ☐

Fastener #5

- Rake support to purlin (Floating System Only)
- Floating eave plate to eave strut

¼"-14 x 1¼" Shoulder Tek® 2
5⁄16" Hex Washer Head, with no washer ☐

Fastener #6A

- Clip to joist

12-24 x 1¼" Tek® 4.5 Driller
5⁄16" Hex Washer Head, with no washer ☐

Fastener #7

- Rake support to joist (Floating System Only)
- Floating eave plate to structural steel

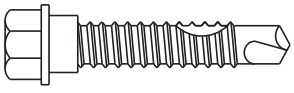

¼"-20 x 1¼" Shoulder Tek® 4
5⁄16" Hex Washer Head, with no washer ☐

MBCI®
Metal Roof and Wall Systems

Houston, TX 877-713-6224
Adel, GA 888-446-6224
Atlanta, GA 877-512-6224
Atwater, CA 800-829-9324
Dallas, TX 800-653-6224
Indianapolis, IN 800-735-6224
Jackson, MS 800-622-4136
Lubbock, TX 800-758-6224
Memphis, TN 800-206-6224
Oklahoma City, OK 800-597-6224
Omaha, NE 800-458-6224
Phoenix, AZ 888-533-6224
Richmond, VA 800-729-6224
Rome, NY 800-559-6224
Salt Lake City, UT 800-874-2404
San Antonio, TX 800-598-6224

GENERAL INFORMATION

SuperLok®

PRODUCT CHECKLIST

Fastener #12A

- Rake angle to purlin

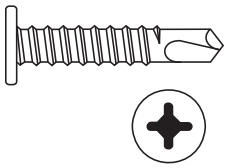

12 x 1" #2 Phillips/Square Drive Pancake Head Driller ❑

Fastener #13A

- Offset cleat to plywood
- Rake angle to plywood

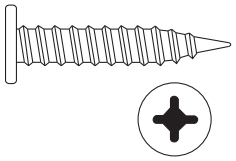

12 x 1" #2 Phillips/Square Drive Pancake Type “A” ❑

Fastener #14A

- Outside closure to angle on floating hip detail

Stainless Steel Pop Rivet ⅛" diameter x ⅜" grip range ❑

Fastener #14

- Trim to trim connections

Stainless Steel Pop Rivet ⅛" diameter x 3⁄16" grip range ❑

Fastener #226

- Dekstrip to Expansion Ridge/Expansion Lap

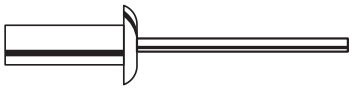

3⁄16" x 9⁄16" Rivet Cendalum
Closed End Rivet ❑

Fastener #17

- Outside closure to panel at ridge
- Eave plate to eave strut
- Mid-slope fixed plate to purlin

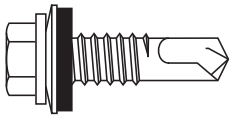

12-14 x 1" Self Driller
5⁄16" Hex Head, with ⅝" O.D. washer ❑

Fastener #17B

- Clip to purlin (Over 4" insulation between panel and purlin)

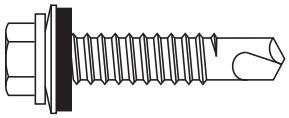

12-14 x 1½" Self Driller
5⁄16" Hex Head, with ⅝" O.D. washer ❑

Fastener #46

- Panel endlaps over solid substrate
- End laps over rigid board

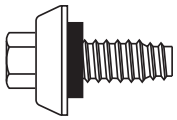

¼"-14 x ⅝" Long Life
Type B with washer ❑

Fastener #228

- Dekstrip to Expansion Ridge/Expansion Lap

10 x ½" Aluminum Grommet Washer ❑

Deck Screw

- Fasteners sold in quantities of 250 only
- 18 gauge maximum drilling thickness

Fastener #209 14 x 2" ❑
Fastener #210 14 x 3" ❑
Fastener #211 14 x 4" ❑
Fastener #15D 14 x 6" ❑

Houston, TX 877-713-6224
Adel, GA 888-446-6224
Atlanta, GA 877-512-6224
Atwater, CA 800-829-9324
Dallas, TX 800-653-6224
Indianapolis, IN 800-735-6224
Jackson, MS 800-622-4136
Lubbock, TX 800-758-6224
Memphis, TN 800-206-6224
Oklahoma City, OK 800-597-6224
Omaha, NE 800-458-6224
Phoenix, AZ 888-533-6224
Richmond, VA 800-729-6224
Rome, NY 800-559-6224
Salt Lake City, UT 800-874-2404
San Antonio, TX 800-598-6224

MBCI®
Metal Roof and Wall Systems

GENERAL INFORMATION

SuperLok®
Panel Orientation

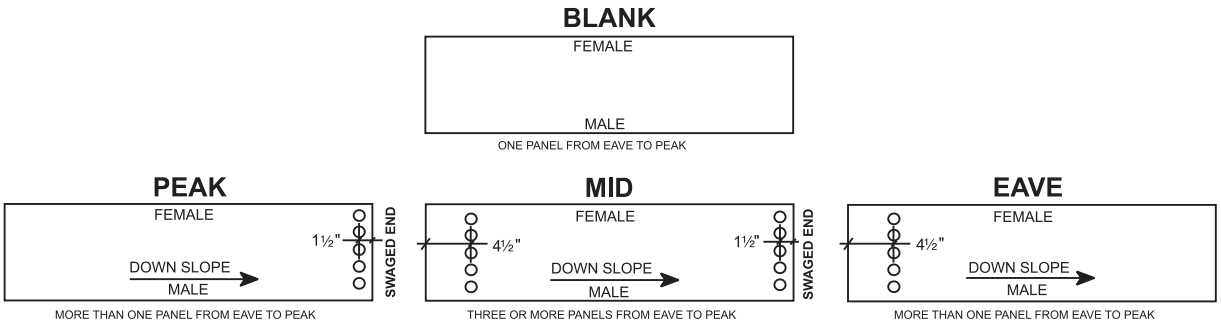

INSTALLATION GUIDELINES

I. Jobsite Storage and Handling

A. Check the shipment against the shipping list.

B. Damaged material must be noted on Bill of Lading.

C. Panel crates should be handled carefully. A spreader bar of appropriate length is recommended for hoisting.

D. Check to see that moisture has not formed inside the bundles during shipment. If moisture is present, panels should be uncrated and wiped dry, then restacked and loosely covered so that air can circulate between the panels.

II. Application Checklist

A. Check substructure for proper alignment and uniformity to avoid panel distortion.

B. Periodic check of panel alignment is crucial to proper panel alignment.

C. If there is a conflict between this manual and the project erection drawings, the erection drawings will take precedence.

III. LTP Warning

A. **WARNING: Light transmitting panels are not designed or intended to bear the weight of any person walking, stepping, standing or resting on them. THE MANUFACTURER DISCLAIMS ANY WARRANTY OR REPRESENTATION, EXPRESS OR IMPLIED, that any person can safely walk, step, stand or rest on or near these light transmitting panels or that they comply with any OSHA regulation.**

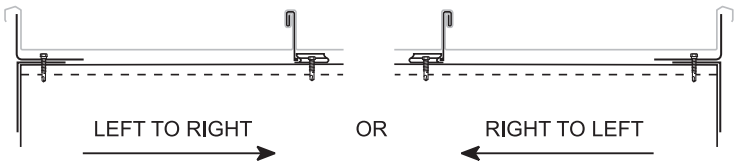

SHEETING DIRECTION FOR ROOFS WITHOUT PANEL ENDLAPS

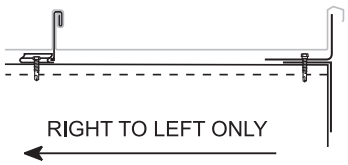

SHEETING DIRECTION FOR ROOFS WITH PANEL ENDLAPS

MBCI®
Metal Roof and Wall Systems

Houston, TX 877-713-6224
Adel, GA 888-446-6224
Atlanta, GA 877-512-6224
Atwater, CA 800-829-9324
Dallas, TX 800-653-6224
Indianapolis, IN 800-735-6224
Jackson, MS 800-622-4136
Lubbock, TX 800-758-6224
Memphis, TN 800-206-6224
Oklahoma City, OK 800-597-6224
Omaha, NE 800-458-6224
Phoenix, AZ 888-533-6224
Richmond, VA 800-729-6224
Rome, NY 800-559-6224
Salt Lake City, UT 800-874-2404
San Antonio, TX 800-598-6224

GENERAL INFORMATION

SuperLok®

PREPARATORY REQUIREMENTS

1. For the purpose of this manual, we have assumed that the **SuperLok®** roof will be installed over purlins and an eave gutter will be installed. Please refer to the Design Section of the manuals for details of **SuperLok®** over other substrates.
2. A rake angle or an alternate structural flat surface must be installed on top of the purlins to accept the rake support.
3. All primary and secondary framing must be erected, plumbed and squared with bolts tightened according to accepted building practices.
4. The substructure (eave to ridge) must be on plane (¼" in 20' or ⅜" in 40' tolerance).
5. It is critical that the purlins or bar joists at the ridge and endlaps be located exactly as detailed and that they are straight from rafter to rafter. Any mislocation or bowing of these members can cause the fasteners at the ridge or endlaps to foul as the panels expand and contract.
6. The manufacturer recommends the use of a screw gun with a speed range of 0-2000 RPM to properly install all fasteners referenced in this manual. Tools rated to 4000 RPM should never be used for self drilling fasteners typically supplied with metal roof and wall systems.
7. Field cutting of the panels should be avoided where possible. If field cutting is required, the panels must be cut with nibblers, snips, or shears to prevent edge rusting. Do not cut the panels with saws, abrasive blades, grinders, or torches.

CAUTION

Avoid restricting the thermal expansion and contraction of the **SuperLok®** panels.
(i.e., Do not attach panel to the substructure at either the eave and ridge.)

WARNING: Light transmitting panels are not designed or intended to bear the weight of any person walking, stepping, standing or resting on them. THE MANUFACTURER DISCLAIMS ANY WARRANTY OR REPRESENTATION, EXPRESS OR IMPLIED, that any person can safely walk, step, stand or rest on or near these light transmitting panels or that they comply with any OSHA regulation.

NOTE

It is the responsibility of the erector to install this roof using safe construction practices that are in compliance with OSHA regulations. The manufacturer is not responsible for the performance of this roof system if it is not installed in accordance with the instructions shown in this manual. Deviations from these instructions and details must be approved in writing by the manufacturer.

CAUTION

Diaphragm capabilities and purlin stability are not provided by the **SuperLok®** roof system.
Therefore, other bracing may be required.

Houston, TX 877-713-6224
Adel, GA 888-446-6224
Atlanta, GA 877-512-6224
Atwater, CA 800-829-9324
Dallas, TX 800-653-6224
Indianapolis, IN 800-735-6224
Jackson, MS 800-622-4136
Lubbock, TX 800-758-6224
Memphis, TN 800-206-6224
Oklahoma City, OK 800-597-6224
Omaha, NE 800-458-6224
Phoenix, AZ 888-533-6224
Richmond, VA 800-729-6224
Rome, NY 800-559-6224
Salt Lake City, UT 800-874-2404
San Antonio, TX 800-598-6224

MBCI®
Metal Roof and Wall Systems

SuperLok®

GENERAL INFORMATION

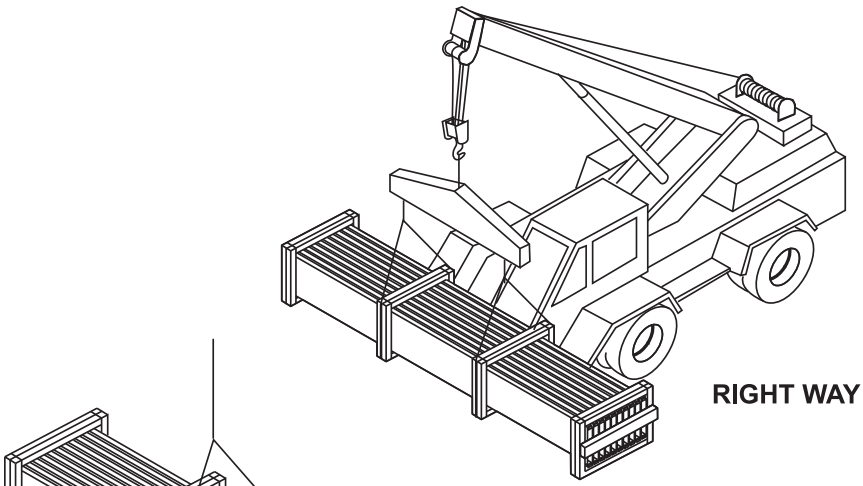

RIGHT WAY

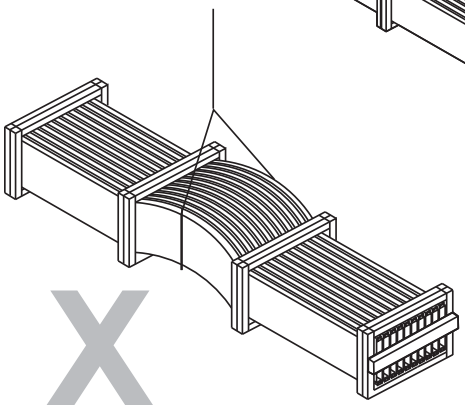

WRONG WAY

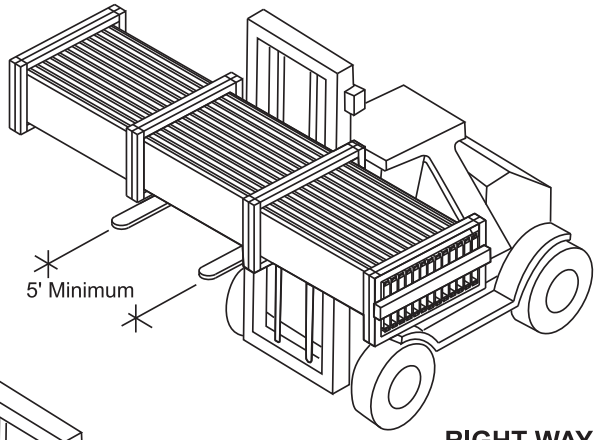

RIGHT WAY

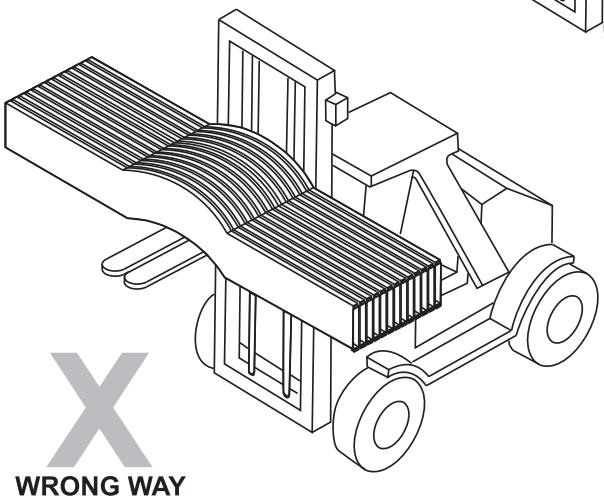

WRONG WAY

UNLOADING

Upon receiving material, check shipment against shipping list for shortages and damages. The manufacturer will not be responsible for shortages or damages unless they are noted on the shipping list.

Each bundle should be lifted at its center of gravity. Where possible, bundles should remain banded until final placement on roof. If bundles must be opened, they should be retied before lifting.

When lifting bundles with a crane, a spreader bar and nylon straps should be used. **NEVER USE WIRE ROPE SLINGS, THEY WILL DAMAGE THE PANELS.**

When lifting bundles with a forklift, forks must be a minimum of five feet apart. Do not transport open bundles. Drive slowly when crossing rough terrain to prevent panel buckling.

CAUTION

Improper unloading and handling of bundles and crates may cause bodily injury or material damage. The manufacturer is not responsible for bodily injuries or material damages during unloading and storage.

MBCI®
Metal Roof and Wall Systems

Houston, TX 877-713-6224
Adel, GA 888-446-6224
Atlanta, GA 877-512-6224
Atwater, CA 800-829-9324
Dallas, TX 800-653-6224
Indianapolis, IN 800-735-6224
Jackson, MS 800-622-4136
Lubbock, TX 800-758-6224
Memphis, TN 800-206-6224
Oklahoma City, OK 800-597-6224
Omaha, NE 800-458-6224
Phoenix, AZ 888-533-6224
Richmond, VA 800-729-6224
Rome, NY 800-559-6224
Salt Lake City, UT 800-874-2404
San Antonio, TX 800-598-6224

UNLOADING (Continued)

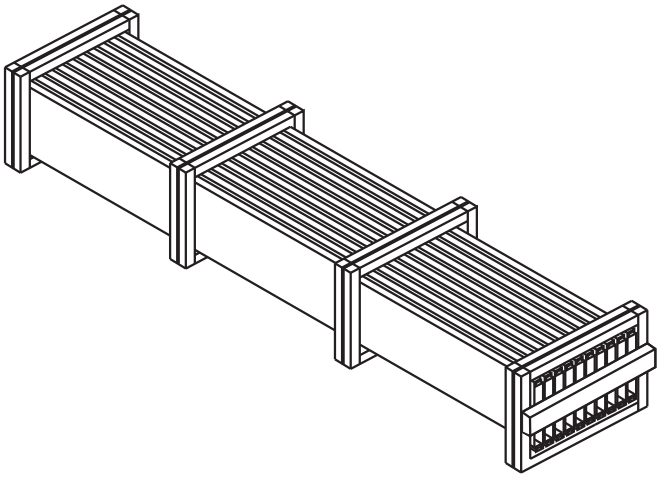

BLOCK AND BAND

This method of bundling is used for orders that are to be picked up by the customer or shipped by common carrier. 2 x 4's are strapped under the bundles to allow access for straps or a forklift. Bundles less than 25' long may be handled by a forklift. The forklift should have at least 5' between forks. Bundles longer than 25' should be lifted utilizing a spreader bar with nylon straps.

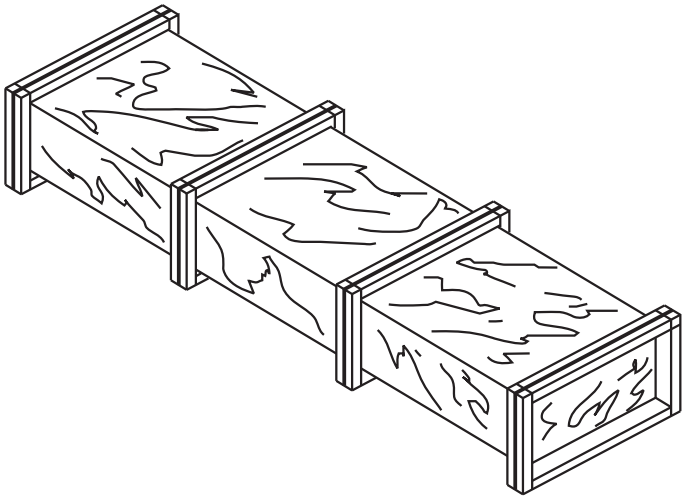

FULL CRATE

This method is used on all overseas shipments or by customer's order. Handling requirements are the same as block and band.

Houston, TX 877-713-6224
Adel, GA 888-446-6224
Atlanta, GA 877-512-6224
Atwater, CA 800-829-9324
Dallas, TX 800-653-6224
Indianapolis, IN 800-735-6224
Jackson, MS 800-622-4136
Lubbock, TX 800-758-6224
Memphis, TN 800-206-6224
Oklahoma City, OK 800-597-6224
Omaha, NE 800-458-6224
Phoenix, AZ 888-533-6224
Richmond, VA 800-729-6224
Rome, NY 800-559-6224
Salt Lake City, UT 800-874-2404
San Antonio, TX 800-598-6224

MBCI®
Metal Roof and Wall Systems

SuperLok® GENERAL INFORMATION

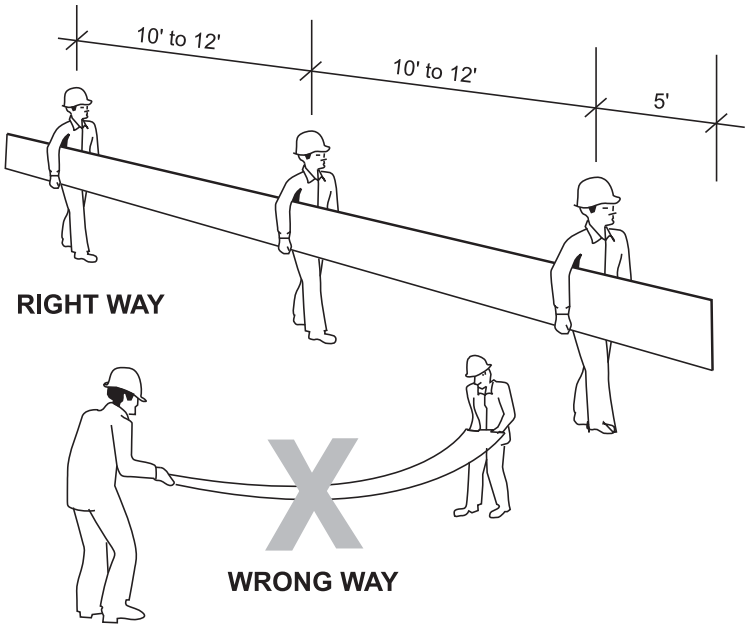

HANDLING/PANEL STORAGE

Standing on one side of the panel, lift it by the seam. If the panel is over 10' long, lift it with two or more people on one side of the panel to prevent buckling.

Do not pick panels up by the ends.

NOTE:

Protective gloves and safety glasses should always be used while handling panels. OSHA safety regulations must be followed at all times.

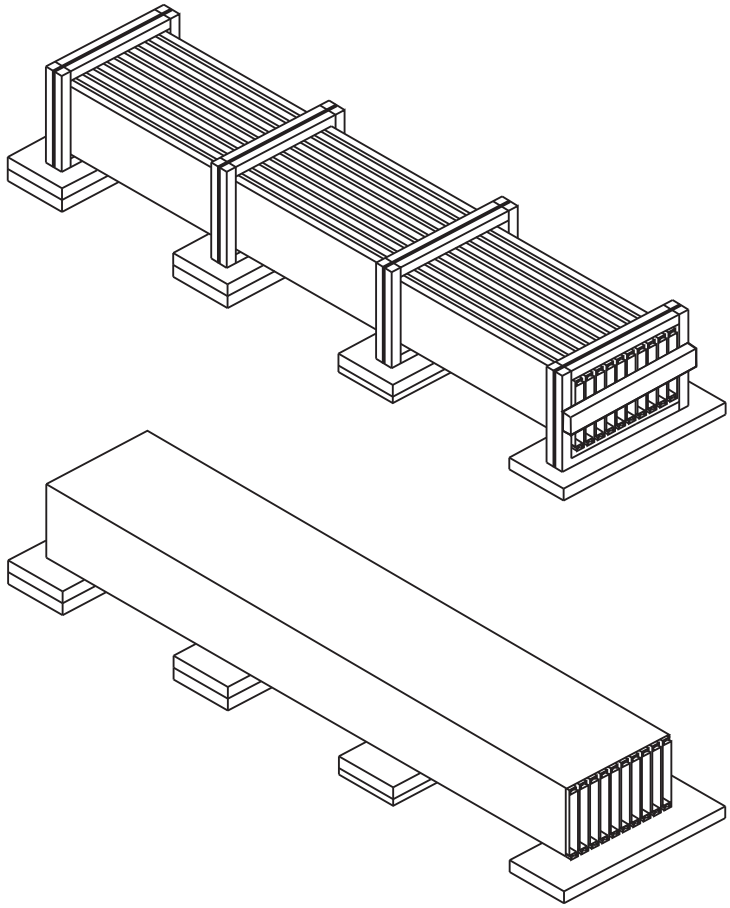

Store bundled sheets off the ground sufficiently high to allow air circulation beneath bundle and to prevent rising water from entering bundle. Slightly elevate one end of bundle. Prevent rain from entering bundle by covering with tarpaulin, making provision for air circulation between draped edges of tarpaulin and the ground. **PROLONGED STORAGE OF SHEETS IN A BUNDLE IS NOT RECOMMENDED.** If conditions do not permit immediate erection, extra care should be taken to protect sheets from white rust or water marks.

Check to see that moisture has not formed inside the bundles during shipment. If moisture is present, panels should be uncrated and wiped dry, then restacked and loosely covered so that air can circulate between the panels.

MBCI®
Metal Roof and Wall Systems

Houston, TX 877-713-6224
Adel, GA 888-446-6224
Atlanta, GA 877-512-6224
Atwater, CA 800-829-9324
Dallas, TX 800-653-6224
Indianapolis, IN 800-735-6224
Jackson, MS 800-622-4136
Lubbock, TX 800-758-6224
Memphis, TN 800-206-6224
Oklahoma City, OK 800-597-6224
Omaha, NE 800-458-6224
Phoenix, AZ 888-533-6224
Richmond, VA 800-729-6224
Rome, NY 800-559-6224
Salt Lake City, UT 800-874-2404
San Antonio, TX 800-598-6224

INSTALLATION SEQUENCE

SuperLok®

STEP 1

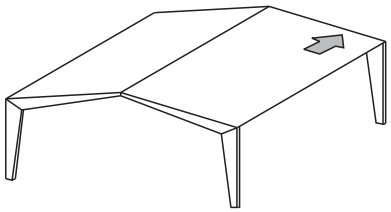

RAKE ATTACHMENT

Attach the rake angle to the purlin with the Fastener #12A.

Attach the rake support on top of the rake angle with the proper self-drilling fasteners (See "Rake Support Fastener Requirements" Below) on 2'-0" centers with a fastener in the first and last prepunched slot. The vertical leg is to be installed flush with the steel line.

IT IS IMPORTANT THAT THE RAKE SUPPORT IS INSTALLED STRAIGHT AND SQUARE WITH THE EAVE AS IT CONTROLS THE ALIGNMENT OF THE ROOF SYSTEM.

Install 6" long pieces of double faced tape (not by Manufacturer) on 3'-0" centers to the top of the horizontal leg of the rake support. This will help hold the insulation in place at the rake.

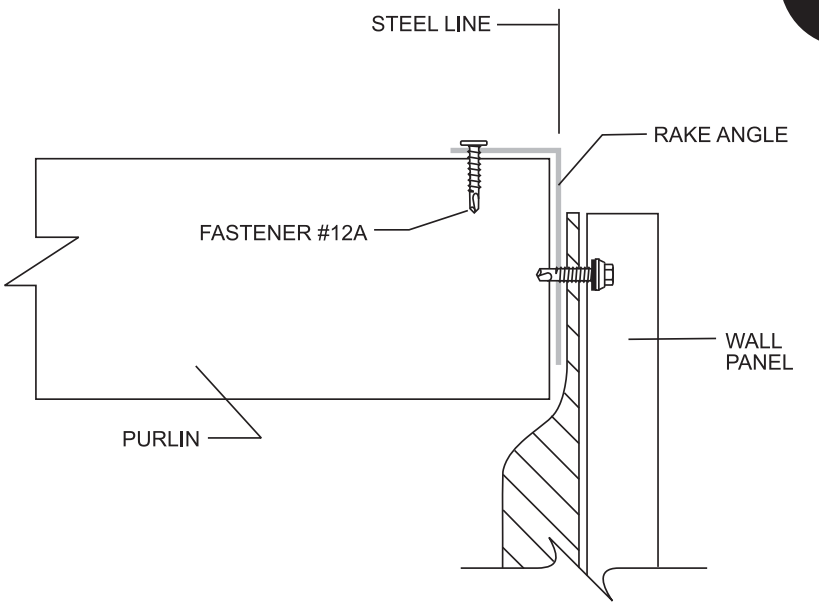

RAKE ANGLE ATTACHMENT

RAKE SUPPORT FASTENER REQUIREMENTS

- **Fixed System** - Fastener #17
- **Floating System** - Fastener #5

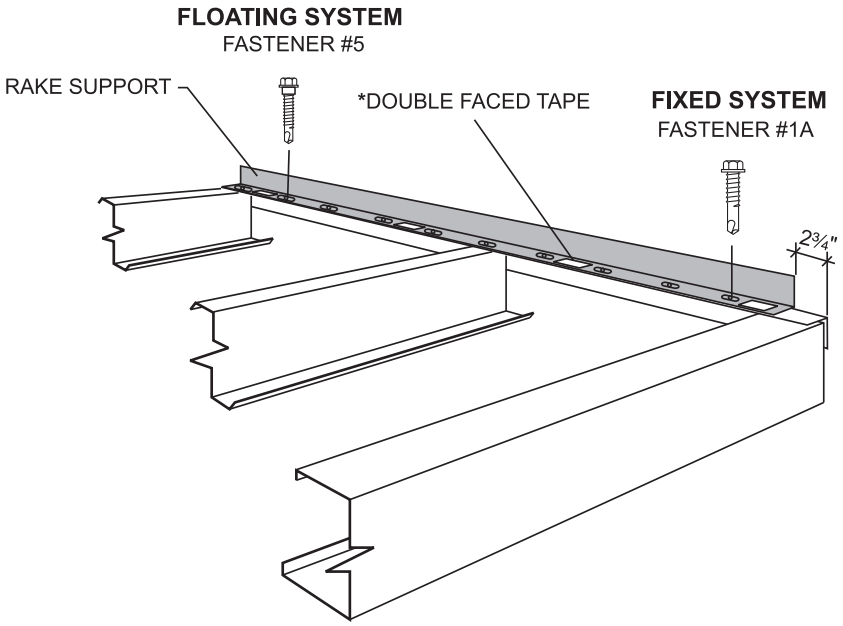

RAKE SUPPORT ATTACHMENT

CAUTION
(For Floating Systems Only)

It is important that shoulder fasteners are installed through the CENTER of the slotted holes of the rake support to allow for expansion and contraction.

***Not by Manufacturer**

Houston, TX 877-713-6224
Adel, GA 888-446-6224
Atlanta, GA 877-512-6224
Atwater, CA 800-829-9324
Dallas, TX 800-653-6224
Indianapolis, IN 800-735-6224
Jackson, MS 800-622-4136
Lubbock, TX 800-758-6224
Memphis, TN 800-206-6224
Oklahoma City, OK 800-597-6224
Omaha, NE 800-458-6224
Phoenix, AZ 888-533-6224
Richmond, VA 800-729-6224
Rome, NY 800-559-6224
Salt Lake City, UT 800-874-2404
San Antonio, TX 800-598-6224

MBCI®
Metal Roof and Wall Systems

SuperLok® INSTALLATION SEQUENCE

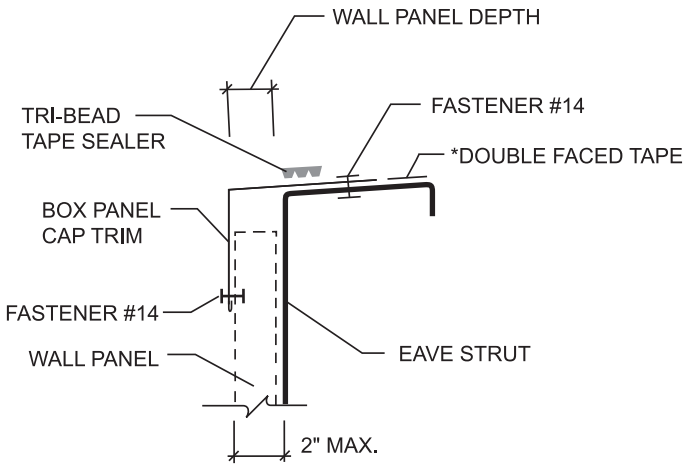

WALL PANEL INSTALLED BEFORE ROOF

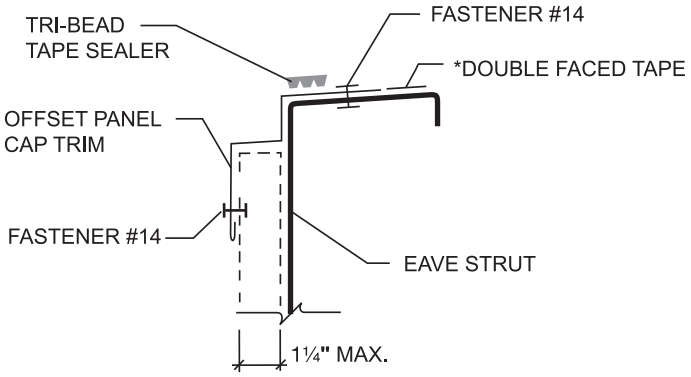

WALL PANEL INSTALLED BEFORE OR AFTER ROOF

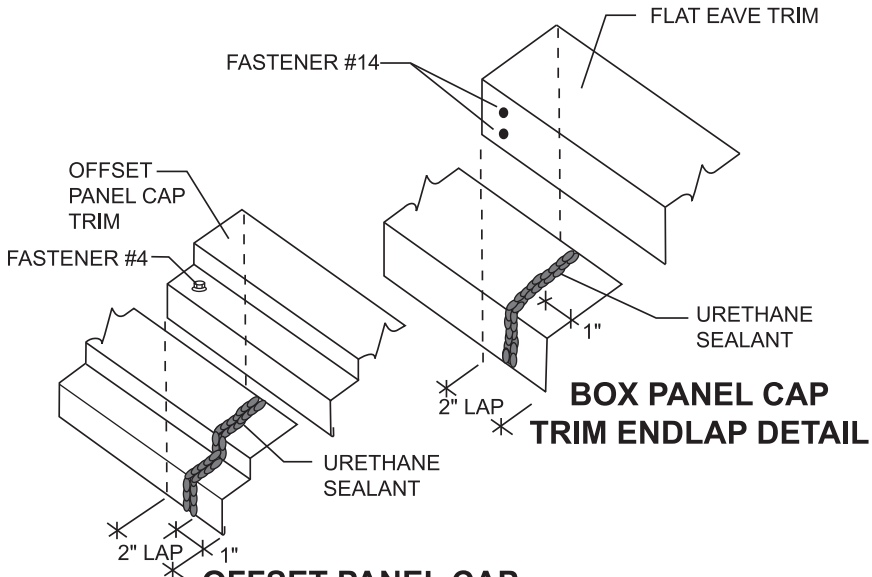

BOX PANEL CAP TRIM ENDLAP DETAIL

OFFSET PANEL CAP TRIM ENDLAP DETAIL

***Not by Manufacturer**

STEP 2

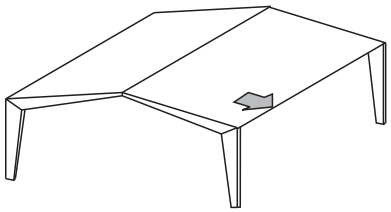

LOW SYSTEM EAVE

For applications in which the wall panels have already been erected, install box panel cap trim or offset panel cap trim to the eave strut with Fastener #14. Eave trim must be pulled tight to wall panels with Fastener #14 before fastening to eave strut. **For applications in which the wall panels have not been erected, use offset panel cap trim.** If using panel cap trim, it will space itself for the wall offset panels. Use three Fastener #14 per trim piece.

Install Tri-Bead tape sealer along top of the trim.

For vinyl insulation, install double faced tape (not by Manufacturer) along the length of the top leg of the trim. Double faced tape must be upslope from Tri-Bead tape sealer.

Lap trim 2". Apply two beads of urethane sealant between the trim pieces, approximately 1" from the end of the bottom piece. Attach trim laps in flat eave trim with Fastener #14. Attach trim laps on panel cap trim with Fastener #4.

MBCI®
Metal Roof and Wall Systems

Houston, TX 877-713-6224
Adel, GA 888-446-6224
Atlanta, GA 877-512-6224
Atwater, CA 800-829-9324
Dallas, TX 800-653-6224
Indianapolis, IN 800-735-6224
Jackson, MS 800-622-4136
Lubbock, TX 800-758-6224
Memphis, TN 800-206-6224
Oklahoma City, OK 800-597-6224
Omaha, NE 800-458-6224
Phoenix, AZ 888-533-6224
Richmond, VA 800-729-6224
Rome, NY 800-559-6224
Salt Lake City, UT 800-874-2404
San Antonio, TX 800-598-6224

INSTALLATION SEQUENCE

SuperLok®

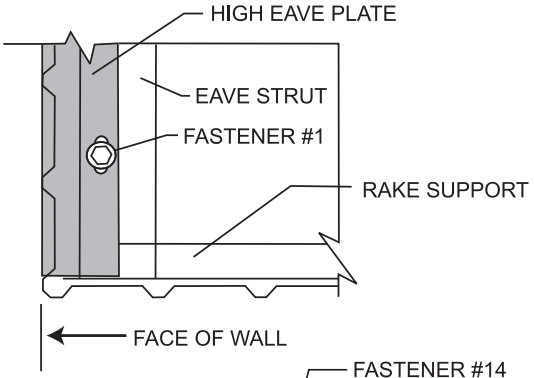

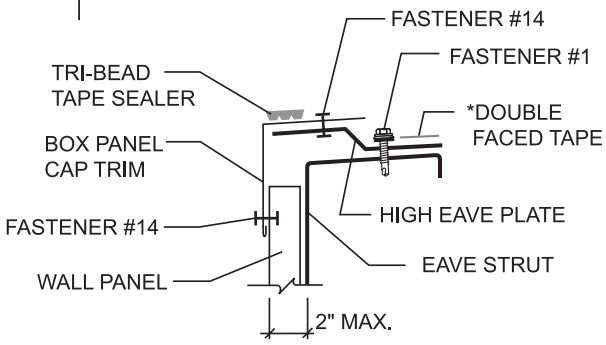

FLAT EAVE TRIM DETAIL (WITHOUT GUTTER)

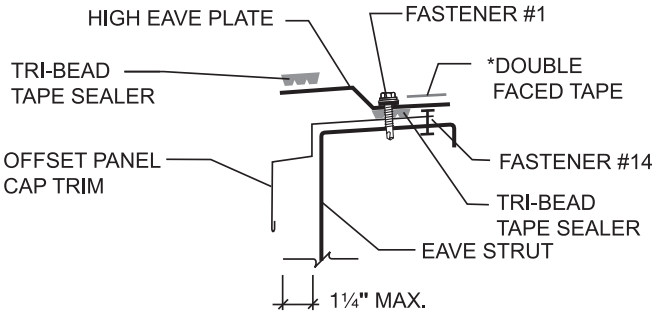

OFFSET PANEL CAP TRIM DETAIL (WITH GUTTER)

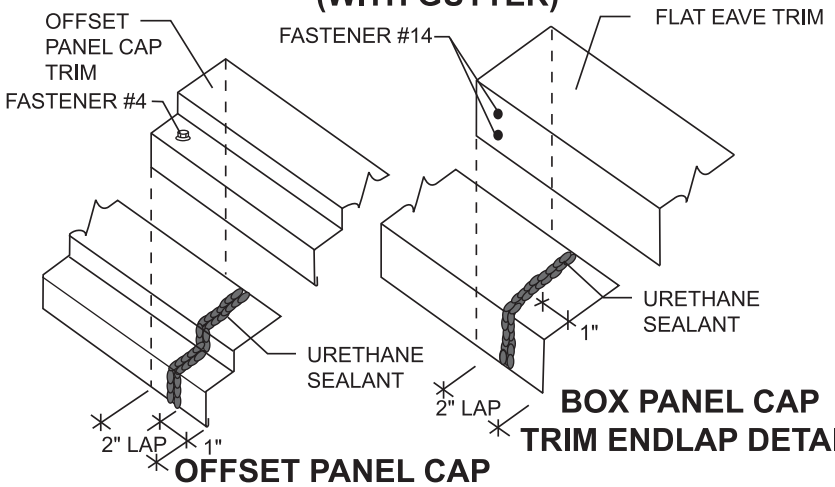

OFFSET PANEL CAP TRIM ENDLAP DETAIL

BOX PANEL CAP TRIM ENDLAP DETAIL

***Not by Manufacturer**

STEP 2A

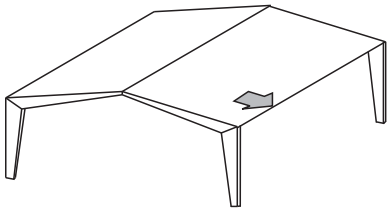

HIGH SYSTEM EAVE

Wall Panels Installed Before Roof

Install high eave plates flush with the outside face of the high crowns of the wall panels. Install Fastener #1 in prepunched slots (1'-0" on center) of the eave plate. The first eave plate will butt against the rake support. All of the eave plates may be installed at this time.

Be sure to butt each eave plate end to end without leaving a gap between the plates. Place an 8" length of Triple Bead tape sealer at each butt joint.

Install box panel cap trim to the top of the eave plates. Check to make sure the trim is flat against the wall. Attach the trim to the eave plate and the wall panel with a Fastener #14 at 10'-0" centers.

Lay Tri-Bead tape sealer across the top of the eave trim, flush with the outside edge.

For vinyl back insulation, install double faced tape (not by Manufacturer) along the length of the bottom of the eave plate. Double faced tape must be upslope from the Tri-Bead tape sealer.

Wall Panels Installed After Roof

Install offset panel cap trim to the eave strut and wall panel with Fastener #14 at 10'-0" centers. Use three fasteners per trim piece.

Install high eave plates flush with the outside of the offset panel cap trim. Install Fastener # 1 in each prepunched slot (1'-0" on center) of the eave plate. The first eave plate will butt against the rake support. All of the eave plates may be installed at this time

Lay Tri-Bead tape sealer under the eave plate on top of the offset panel cap trim.

Be sure to butt each eave plate end to end without leaving a gap between the plates. Place an 8" length of Triple Bead tape sealer at each butt joint.

Lay Tri-Bead tape sealer across the top of the eave plates, flush with the outside edge. For vinyl back insulation, install double faced tape (not by Manufacturer) along the length of the bottom leg of the eave plate.

Lap trim 2". Apply two beads of urethane sealant between the trim pieces, approximately 1" from the end of the bottom piece. Attach trim laps in flat eave trim with Fastener #14. Attach trim laps on panel cap trim with Fastener #4.

Houston, TX 877-713-6224
Adel, GA 888-446-6224
Atlanta, GA 877-512-6224
Atwater, CA 800-829-9324
Dallas, TX 800-653-6224
Indianapolis, IN 800-735-6224
Jackson, MS 800-622-4136
Lubbock, TX 800-758-6224
Memphis, TN 800-206-6224
Oklahoma City, OK 800-597-6224
Omaha, NE 800-458-6224
Phoenix, AZ 888-533-6224
Richmond, VA 800-729-6224
Rome, NY 800-559-6224
Salt Lake City, UT 800-874-2404
San Antonio, TX 800-598-6224

MBCI®
Metal Roof and Wall Systems

SuperLok® INSTALLATION SEQUENCE

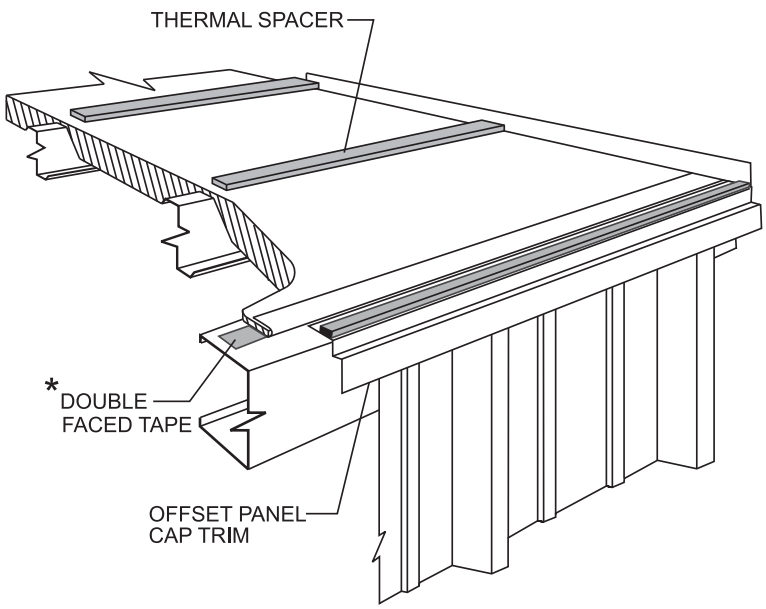

STEP 3

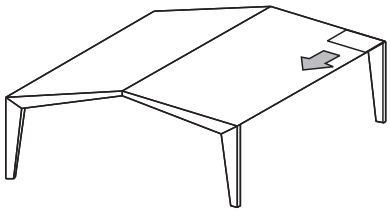

THERMAL SPACER (FOR HIGH SYSTEM ONLY)

Position the thermal spacer on top of the insulation over each purlin and against the rake support prior to installing the roof panel.

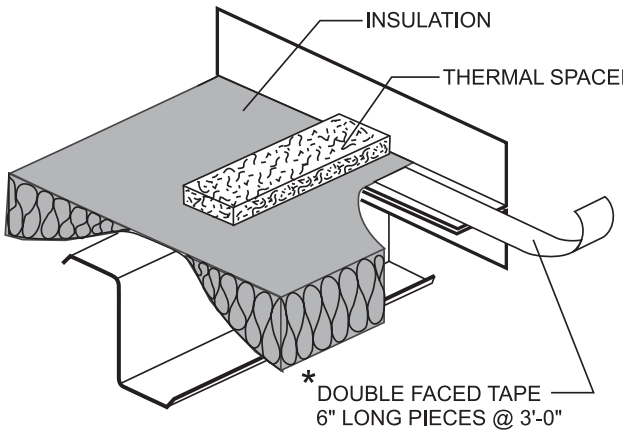

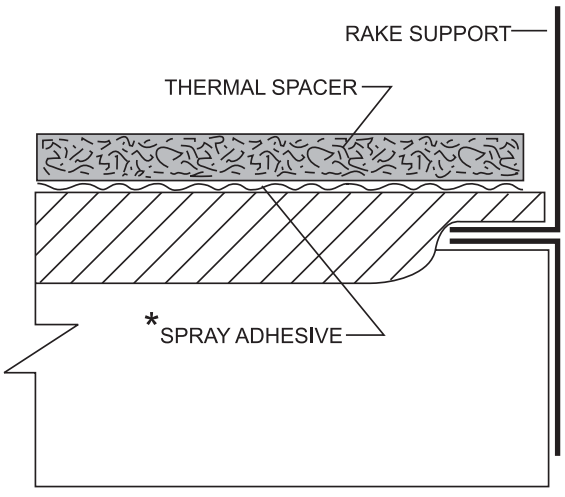

Using spray adhesive, (not by Manufacturer), adhere the thermal spacer to the insulation (First Panel Run Only). The thermal spacer increases the insulation capacity along the purlins.

***Not by Manufacturer**

MBCI®
Metal Roof and Wall Systems

Houston, TX 877-713-6224
Adel, GA 888-446-6224
Atlanta, GA 877-512-6224
Atwater, CA 800-829-9324
Dallas, TX 800-653-6224
Indianapolis, IN 800-735-6224
Jackson, MS 800-622-4136
Lubbock, TX 800-758-6224
Memphis, TN 800-206-6224
Oklahoma City, OK 800-597-6224
Omaha, NE 800-458-6224
Phoenix, AZ 888-533-6224
Richmond, VA 800-729-6224
Rome, NY 800-559-6224
Salt Lake City, UT 800-874-2404
San Antonio, TX 800-598-6224

INSTALLATION SEQUENCE

SuperLok®

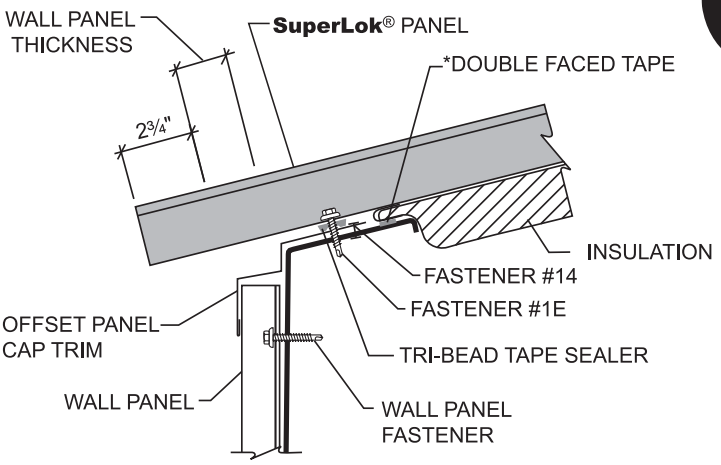

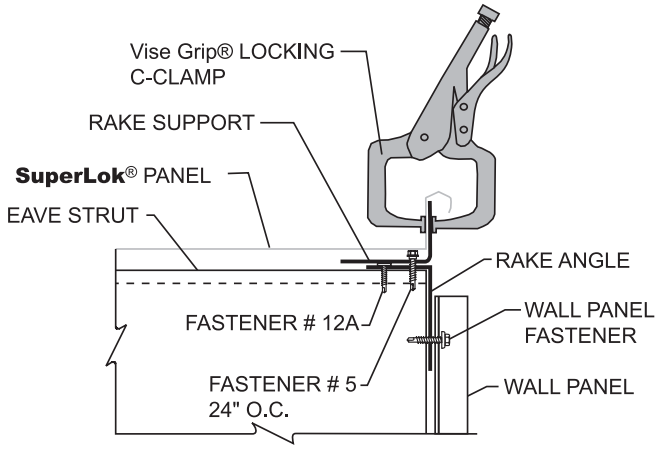

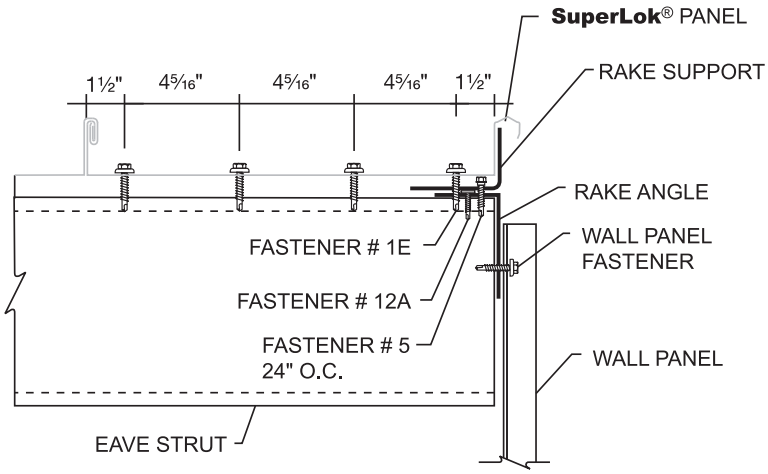

FASTENING PATTERN AT EAVE

***Not by Manufacturer**

STEP 4

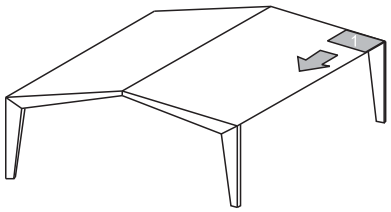

FIRST PANEL

Position the panel so that it overhangs the eave strut by the dimension shown on the building drawings. The upper end of the panel must extend 7" beyond the web of the purlin if the panel covers eave to ridge. If more than one panel is required to cover eave to ridge, one or more endlaps will be required. The upper end of the panel will extend 10" beyond the web of the purlin at endlaps.

NOTE:

If an endlap is required then roof panel must be sheeted right to left as viewed from the eave looking toward the ridge.

Lay the female leg of the panel over the rake support. To prevent wind damage, secure the female leg of the panel to the rake support with Vise Grip® Locking C-Clamps or temporary fasteners. Fasteners must go through the rake support. The panel will not be fastened permanently to the rake support until the rake trim is installed.

Attach the panel to the eave strut or eave plate with Fastener #1E. Four fasteners are required at this location.

Houston, TX 877-713-6224
Adel, GA 888-446-6224
Atlanta, GA 877-512-6224
Atwater, CA 800-829-9324
Dallas, TX 800-653-6224
Indianapolis, IN 800-735-6224
Jackson, MS 800-622-4136
Lubbock, TX 800-758-6224
Memphis, TN 800-206-6224
Oklahoma City, OK 800-597-6224
Omaha, NE 800-458-6224
Phoenix, AZ 888-533-6224
Richmond, VA 800-729-6224
Rome, NY 800-559-6224
Salt Lake City, UT 800-874-2404
San Antonio, TX 800-598-6224

MBCI®
Metal Roof and Wall Systems

SuperLok® INSTALLATION SEQUENCE

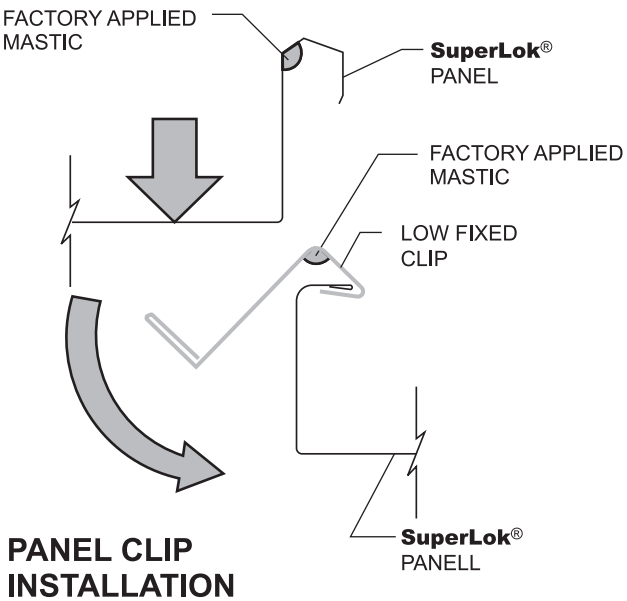

PANEL CLIP INSTALLATION

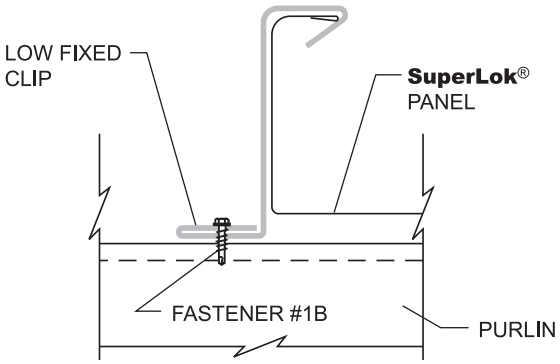

RIGHT WAY

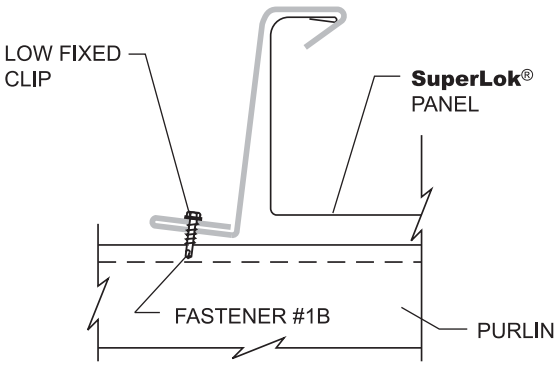

WRONG WAY

STEP 5

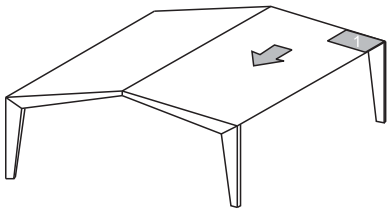

CLIP INSTALLATION

Hook the panel clip onto male leg of panel. Hold end of clip up to keep it engaged onto male leg and rotate the clip base down to completely engage clip onto male leg. Install panel clips at each purlin.

Before fastening clip to purlins, check to ensure that vertical leg of clip is tight to the vertical leg of the panel. Failure to keep this leg tight to the panel leg will affect panel module.

CLIP FASTENER REQUIREMENTS

Purlins - Fastener #1B - Up to 4" Insulation
Fastener #17B - Over 4" Insulation
Bar Joists - Fastener #6A (Two fasteners per clip)

CAUTION

The panel clip has factory applied mastic in the upper lip. This mastic is compressed when the clip is rotated in place. If, for some reason, a clip must be removed, a new clip must be used.

MBCI®
Metal Roof and Wall Systems

Houston, TX 877-713-6224
Adel, GA 888-446-6224
Atlanta, GA 877-512-6224
Atwater, CA 800-829-9324
Dallas, TX 800-653-6224
Indianapolis, IN 800-735-6224
Jackson, MS 800-622-4136
Lubbock, TX 800-758-6224
Memphis, TN 800-206-6224
Oklahoma City, OK 800-597-6224
Omaha, NE 800-458-6224
Phoenix, AZ 888-533-6224
Richmond, VA 800-729-6224
Rome, NY 800-559-6224
Salt Lake City, UT 800-874-2404
San Antonio, TX 800-598-6224

INSTALLATION SEQUENCE

SuperLok®

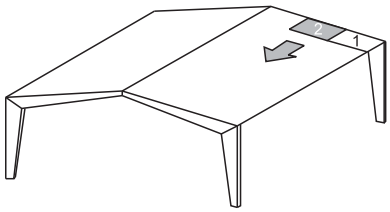

STEP 6

ENDLAP-PANEL

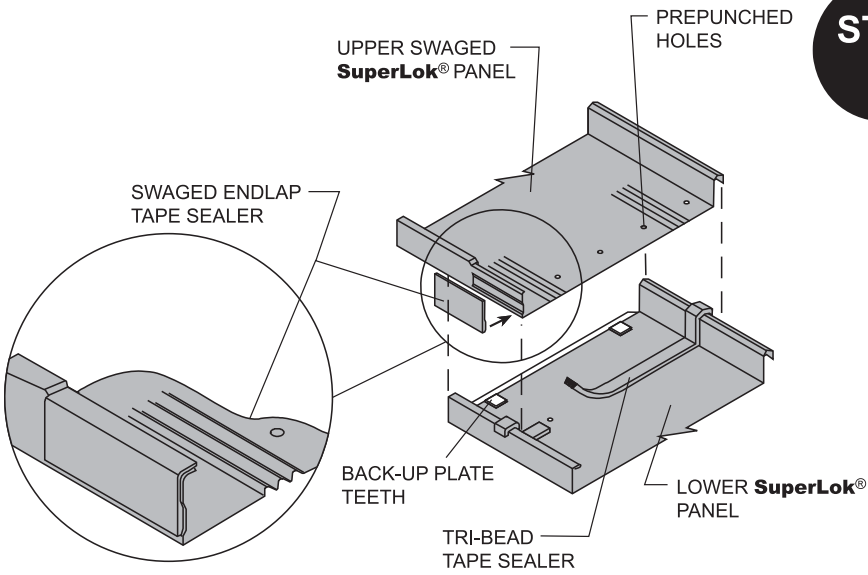

PANEL INSTALLATION SEQUENCE

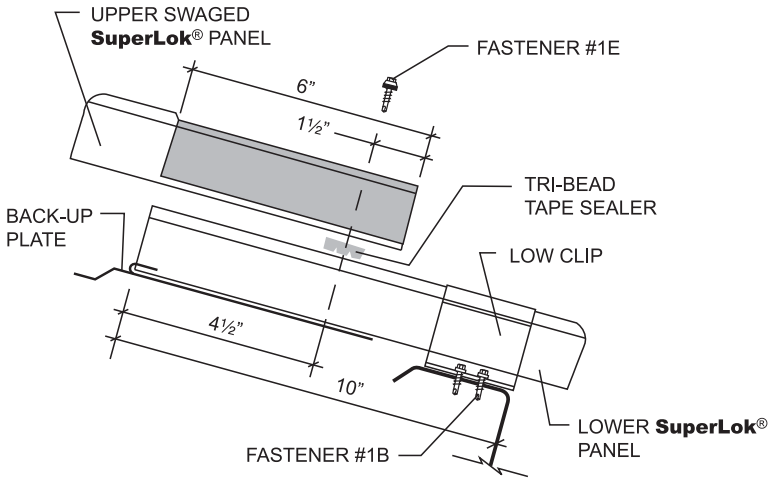

CROSS SECTION OF ENDLAP

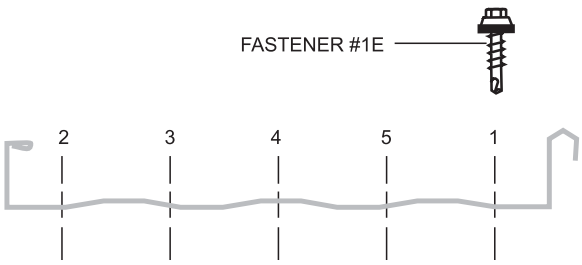

FASTENER SEQUENCE

NOTE:

Step 6 applies only where more than one panel is used in a single slope.

Slide a prepunched back-up plate onto the upslope end of the bottom panel. Make sure the teeth on top of the back-up plate are on top of the panel. Visually check to ensure that the prepunched holes in the back-up plate are aligned with the prepunched holes in the panel. At upslope end of bottom panel, install Tri-Bead tape sealer across entire width of panel. Tape sealer must be centered over prepunched holes in panel. Apply swaged endlap tape sealer to swaged vertical male leg of upper panel. Pigtail portion of tape sealer must lap over vertical leg of panel.

Using an awl to align the prepunched holes, install upper panel by nesting it over the lower panel for 6". Rotate the male leg of the upper panel under the male leg of the bottom panel, then force the female leg of the upper panel down onto the female leg of the bottom panel. Install Fastener #1E in the prepunched holes in the proper sequence. Install clips as outlined in Step 5.

Repeat this endlap procedure as required until ridge is reached.

NOTE:

If you are using 12" **SuperLok®** panels, they are not prepunched for endlaps. Use Triple Bead Tape Sealant at endlaps with 12" wide panels.

Houston, TX 877-713-6224
Adel, GA 888-446-6224
Atlanta, GA 877-512-6224
Atwater, CA 800-829-9324
Dallas, TX 800-653-6224
Indianapolis, IN 800-735-6224
Jackson, MS 800-622-4136
Lubbock, TX 800-758-6224
Memphis, TN 800-206-6224
Oklahoma City, OK 800-597-6224
Omaha, NE 800-458-6224
Phoenix, AZ 888-533-6224
Richmond, VA 800-729-6224
Rome, NY 800-559-6224
Salt Lake City, UT 800-874-2404
San Antonio, TX 800-598-6224

MBCI®
Metal Roof and Wall Systems

SuperLok® INSTALLATION SEQUENCE

STEP 7

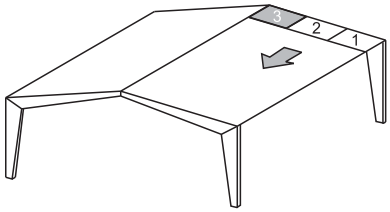

RIDGE

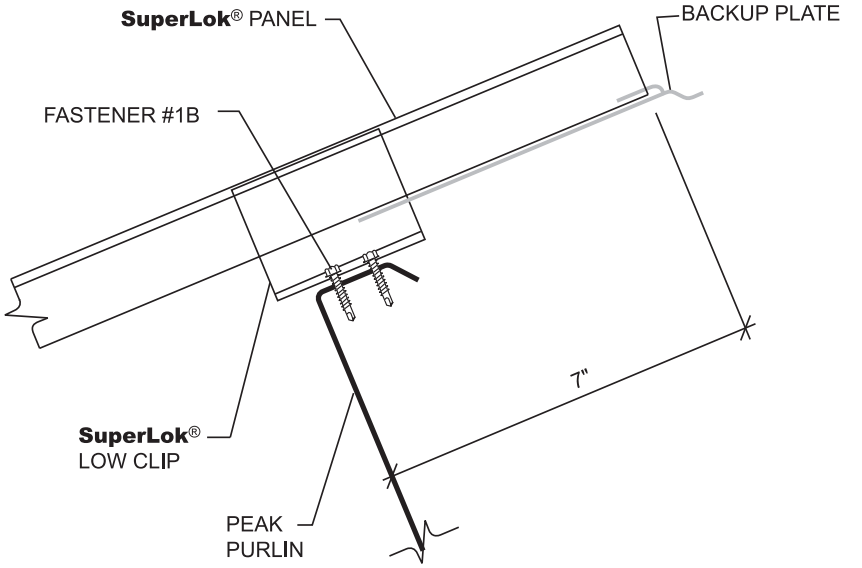

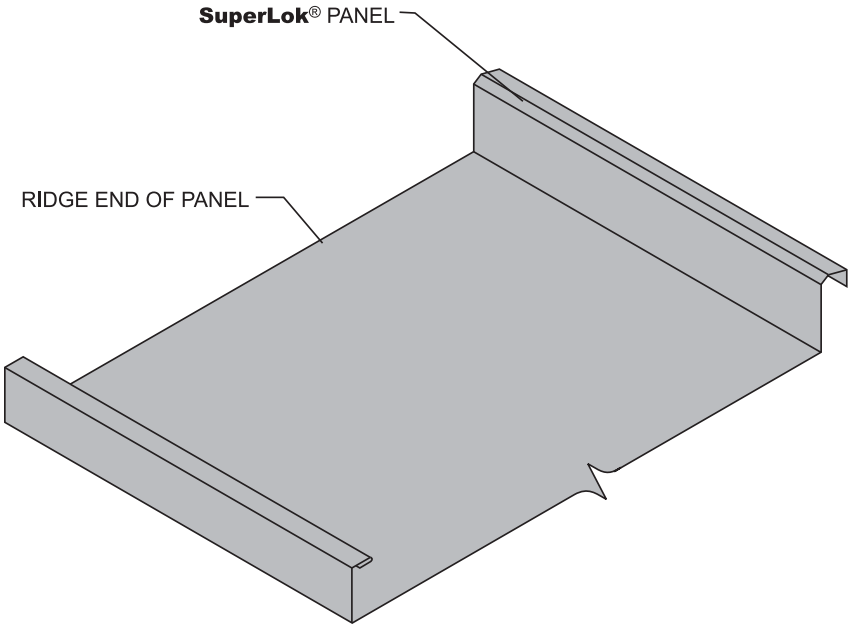

PANEL END SEALANT DETAIL AT RIDGE

At the ridge, the panel should extend 7" past the web of the peak purlin.

At the ridge install a back-up plate as outlined in Step 6.

Install clips as outlined in Step 5.

MBCI®
Metal Roof and Wall Systems

Houston, TX 877-713-6224
Adel, GA 888-446-6224
Atlanta, GA 877-512-6224
Atwater, CA 800-829-9324
Dallas, TX 800-653-6224
Indianapolis, IN 800-735-6224
Jackson, MS 800-622-4136
Lubbock, TX 800-758-6224
Memphis, TN 800-206-6224
Oklahoma City, OK 800-597-6224
Omaha, NE 800-458-6224
Phoenix, AZ 888-533-6224
Richmond, VA 800-729-6224
Rome, NY 800-559-6224
Salt Lake City, UT 800-874-2404
San Antonio, TX 800-598-6224

INSTALLATION SEQUENCE

SuperLok®

STEP 8

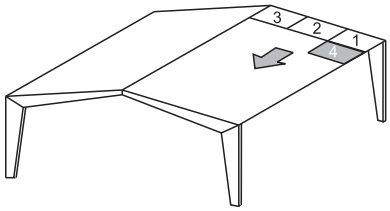

SUBSEQUENT RUNS EAVE

Apply urethane sealant to the male leg of the first panel directly over the Tri-Bead tape sealer at the eave. This will prevent water infiltration through the end of the panel seam.

Position the next panel with the female leg over the male leg of the previous panel with panel ends flush.

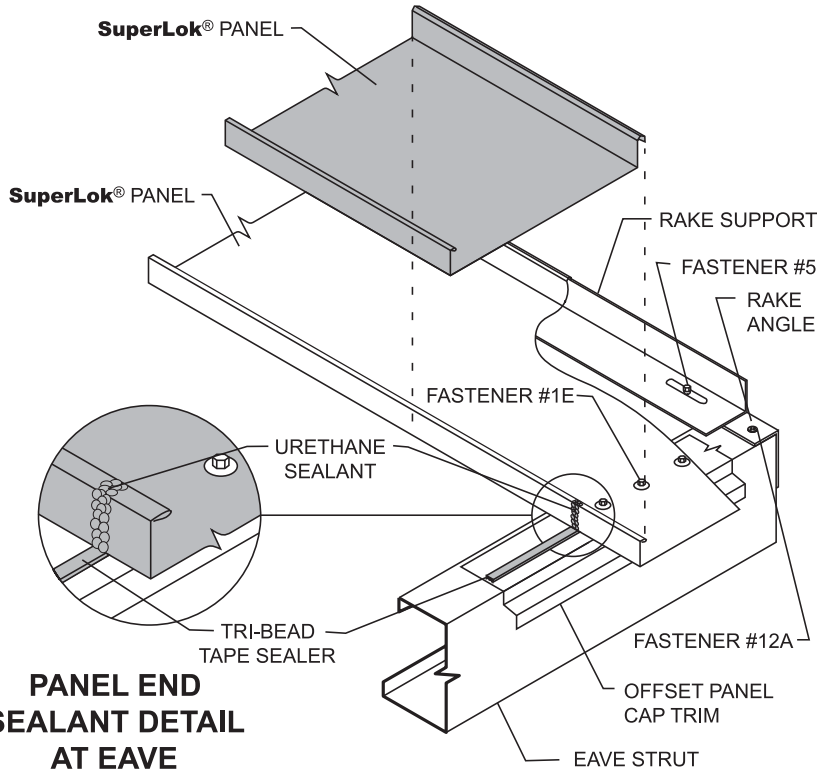

PANEL END SEALANT DETAIL AT EAVE

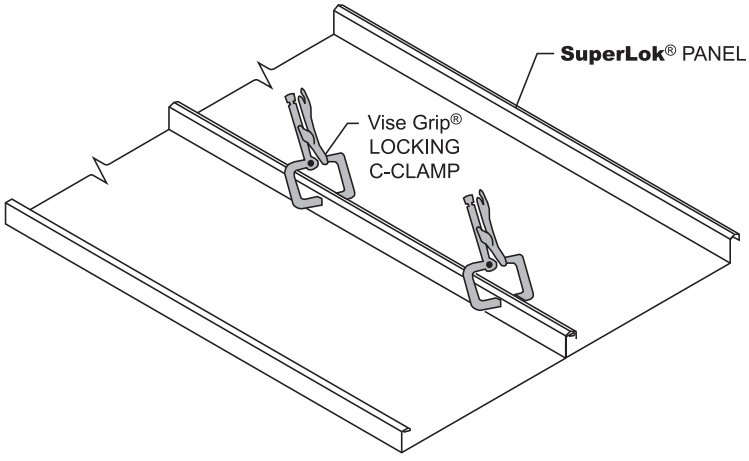

Clamp the panel seam together at both ends. Long panels may require one or more clamps in the middle. This will help hold panel module.

Install fasteners at eave as outlined in Step 4.

Install clips as outlined in Step 5.

Crimp panel seam at all clip locations with hand crimping tool. Panels should be fully seamed with electric seamer as quickly as possible after a section of the roof is completed.

CAUTION

Panel must be crimped at all clip locations as they are installed to provide temporary wind resistance.

Houston, TX 877-713-6224
Adel, GA 888-446-6224
Atlanta, GA 877-512-6224
Atwater, CA 800-829-9324
Dallas, TX 800-653-6224
Indianapolis, IN 800-735-6224
Jackson, MS 800-622-4136
Lubbock, TX 800-758-6224
Memphis, TN 800-206-6224
Oklahoma City, OK 800-597-6224
Omaha, NE 800-458-6224
Phoenix, AZ 888-533-6224
Richmond, VA 800-729-6224
Rome, NY 800-559-6224
Salt Lake City, UT 800-874-2404
San Antonio, TX 800-598-6224

MBCI®
Metal Roof and Wall Systems

SuperLok® INSTALLATION SEQUENCE

STEP 9

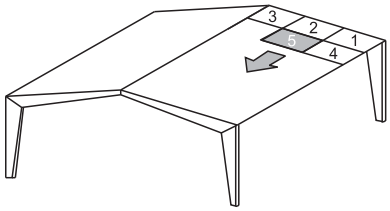

SUBSEQUENT RUNS ENDLAP

Install endlap panels as outlined in Step 6.

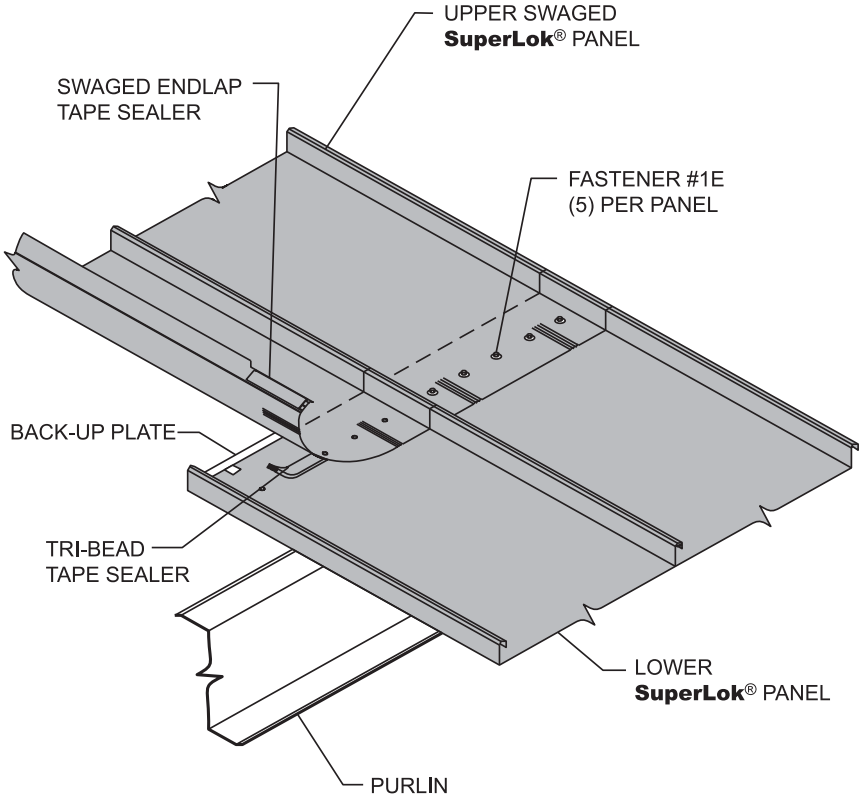

Install clips as described in Step 5.

Repeat endlap procedures as required until ridge is reached.

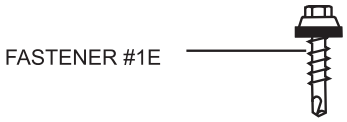

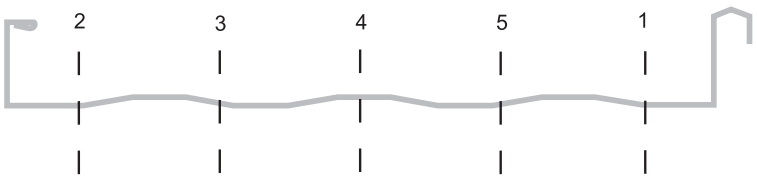

FASTENER SEQUENCE

Metal Roof and Wall Systems

Houston, TX 877-713-6224
Adel, GA 888-446-6224
Atlanta, GA 877-512-6224
Atwater, CA 800-829-9324
Dallas, TX 800-653-6224
Indianapolis, IN 800-735-6224
Jackson, MS 800-622-4136
Lubbock, TX 800-758-6224
Memphis, TN 800-206-6224
Oklahoma City, OK 800-597-6224
Omaha, NE 800-458-6224
Phoenix, AZ 888-533-6224
Richmond, VA 800-729-6224
Rome, NY 800-559-6224
Salt Lake City, UT 800-874-2404
San Antonio, TX 800-598-6224

INSTALLATION SEQUENCE

SuperLok®

STEP 10

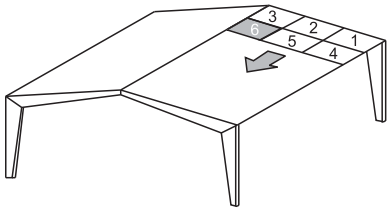

SUBSEQUENT RUNS RIDGE

Install back-up plate as outlined in Step 6 and Step 7.

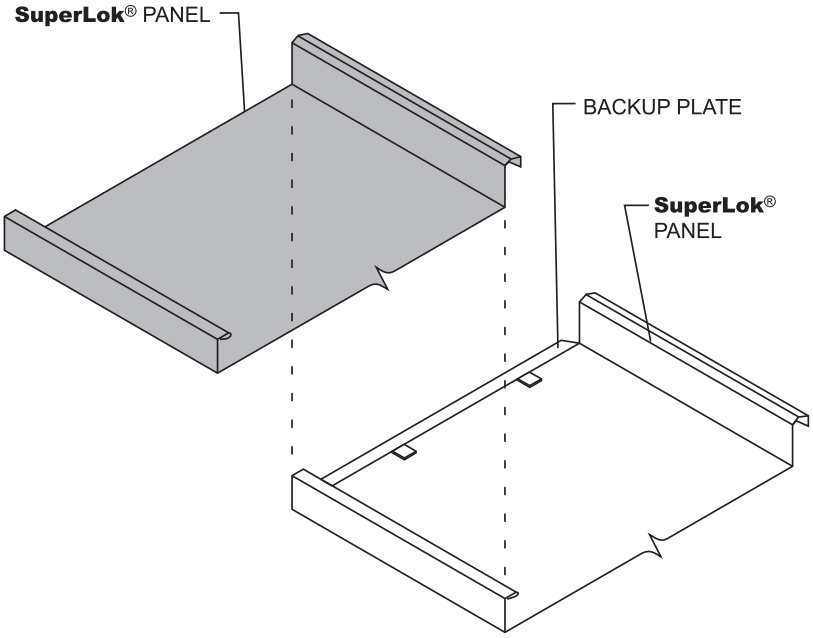

Install clips as described in Step 5.

Houston, TX 877-713-6224
Adel, GA 888-446-6224
Atlanta, GA 877-512-6224
Atwater, CA 800-829-9324
Dallas, TX 800-653-6224
Indianapolis, IN 800-735-6224
Jackson, MS 800-622-4136
Lubbock, TX 800-758-6224
Memphis, TN 800-206-6224
Oklahoma City, OK 800-597-6224
Omaha, NE 800-458-6224
Phoenix, AZ 888-533-6224
Richmond, VA 800-729-6224
Rome, NY 800-559-6224
Salt Lake City, UT 800-874-2404
San Antonio, TX 800-598-6224

MBCI®
Metal Roof and Wall Systems

SuperLok® INSTALLATION SEQUENCE

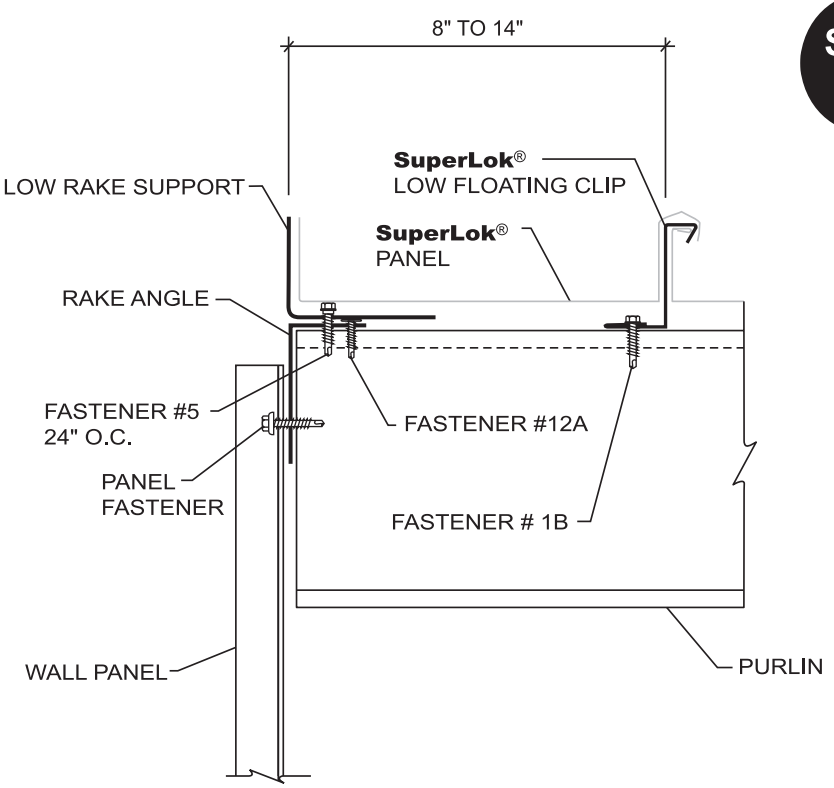

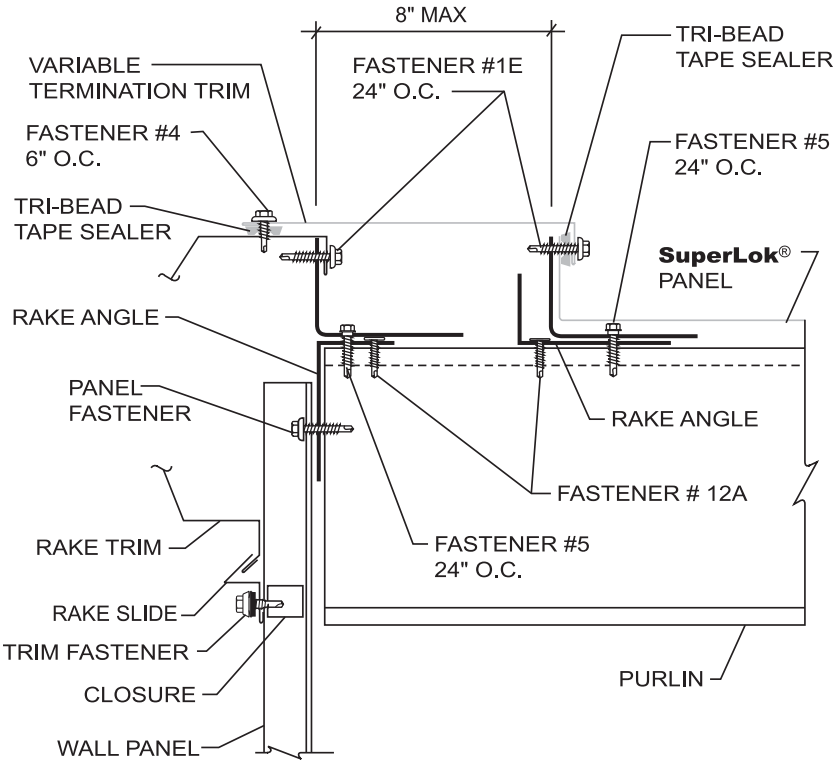

STEP 11

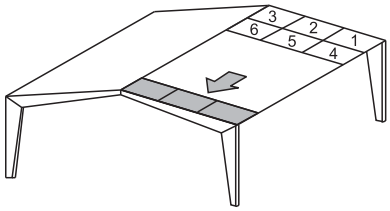

LAST PANEL RUN

Install rake support at the finishing end of the roof as outlined in Step 1.

FINISHING DIMENSION RUN OF 8" TO 14"

Field cut and bend a 2" tall vertical leg on the panels in the last run of roof. The vertical leg must be tight to the rake support angle. Secure the vertical leg to the rake support angle with clamps or temporary fasteners. At the endlap and ridge, a partial back-up plate must be cut.

FINISHING DIMENSION RUN OF LESS THAN 8"

If the width of the last panel run is 8" or less, a second run of rake support angle must be installed for attachment of the vertical leg of the panel. A variable termination trim will be required to seal the gap between the vertical leg of the panel and the rake trim.

The male leg of the panel and the termination trim must be field cut to fit the condition.

MBCI®
Metal Roof and Wall Systems

Houston, TX 877-713-6224
Adel, GA 888-446-6224
Atlanta, GA 877-512-6224
Atwater, CA 800-829-9324
Dallas, TX 800-653-6224
Indianapolis, IN 800-735-6224
Jackson, MS 800-622-4136
Lubbock, TX 800-758-6224
Memphis, TN 800-206-6224
Oklahoma City, OK 800-597-6224
Omaha, NE 800-458-6224
Phoenix, AZ 888-533-6224
Richmond, VA 800-729-6224
Rome, NY 800-559-6224
Salt Lake City, UT 800-874-2404
San Antonio, TX 800-598-6224

INSTALLATION SEQUENCE

SuperLok®

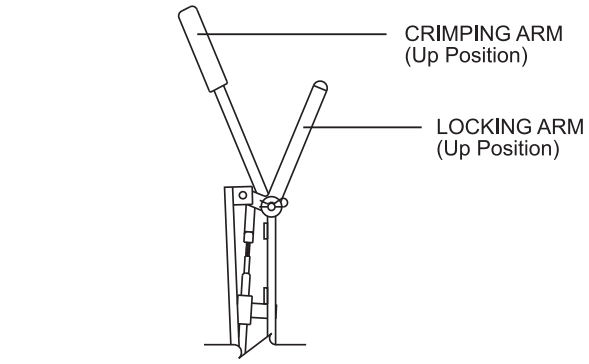

STEP 1
Hand Tool Positioned Over Seam

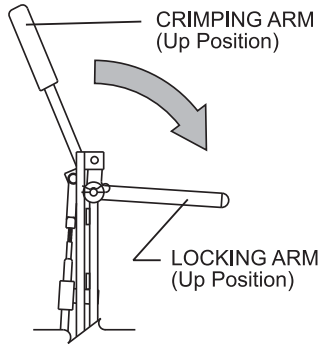

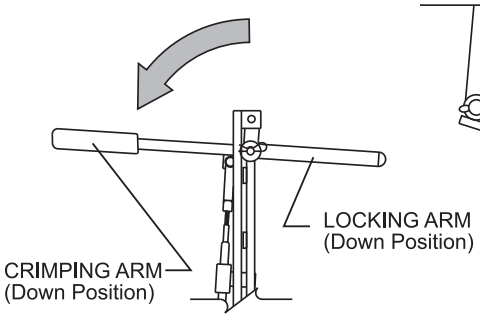

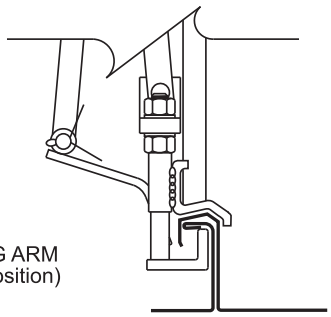

STEP 2
Hand Tool Locked Onto Seam

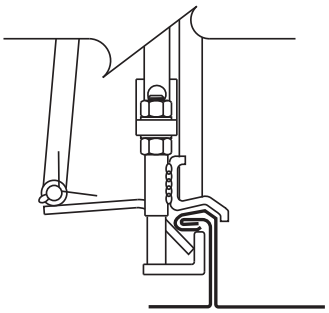

STEP 3
Hand Tool Crimps Seam

STEP 12

SEAMING OPERATION

As panels are installed, hand crimp at each clip location with the hand crimper. Panels should be completely seamed with the electric seamer as soon as possible.

Push locking arm down to lock crimper onto seam. If difficulty is encountered, check to make sure that the hand crimper is properly alighned on seam. **Do not force locking arm.**

Push crimping arm down to crimp panel. Return both the crimping arm and locking arm to the up postion and remove tool from seam.

Houston, TX 877-713-6224
Adel, GA 888-446-6224
Atlanta, GA 877-512-6224
Atwater, CA 800-829-9324
Dallas, TX 800-653-6224
Indianapolis, IN 800-735-6224
Jackson, MS 800-622-4136
Lubbock, TX 800-758-6224
Memphis, TN 800-206-6224
Oklahoma City, OK 800-597-6224
Omaha, NE 800-458-6224
Phoenix, AZ 888-533-6224
Richmond, VA 800-729-6224
Rome, NY 800-559-6224
Salt Lake City, UT 800-874-2404
San Antonio, TX 800-598-6224

MBCI®
Metal Roof and Wall Systems

SuperLok® INSTALLATION SEQUENCE

STEP 12 CONT.

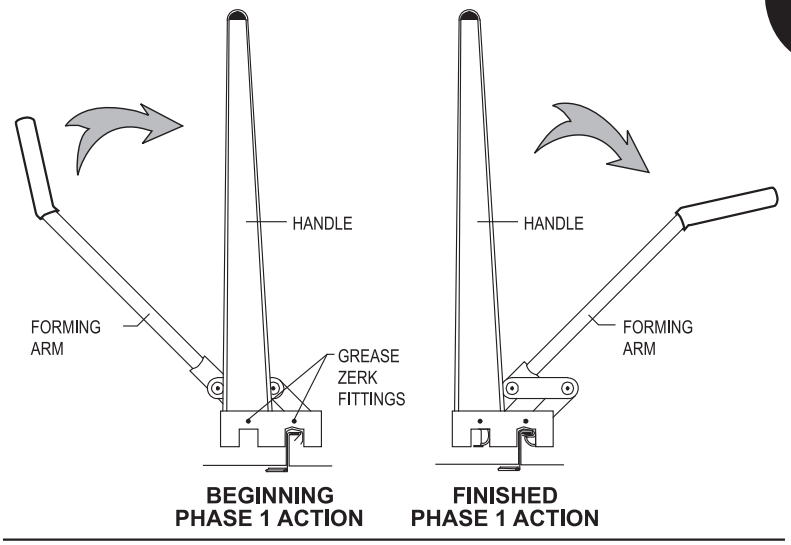

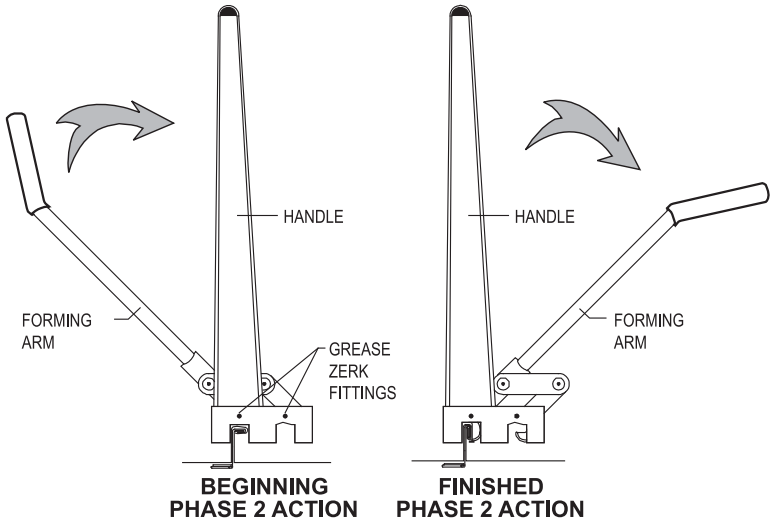

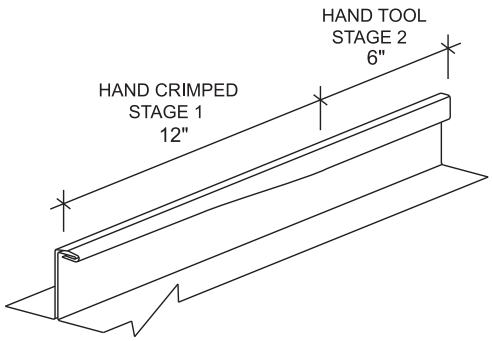

SEAMING OPERATION (Continued)

CAUTION

It is critical that the panel seams are crimped and folded as shown before using the electric seamer. **Failure to follow these guidlines will result in damaged seams.**

To begin seaming with hand tool, set the hand tool on the seam making sure seam is in the **PHASE 1 Action** slot. Align the edge of the hand tool with the end of the panel. Rotate the forming arm under the handle to produce 6" of **PHASE 1** seam. This should be done three times along the seam for a total of 18".

Return to the end of the panel to begin **PHASE 2 Action.** Set hand tool onto seam making sure seam is in the **PHASE 2 Action** slot. Align the edge of the hand tool with the edge of the panel. Rotate the forming arm under the handle to produce 6" of finished **PHASE 2** seam. This should be done once per rib. **The relationship of this 6" of finished seam to the 18" of crimped seam is critical to the proper alignment of the rolls in the electric seamer.**

NOTE

All grease zerk fittings on the hand tool should be greased with lithium based grease daily.

The seam is now ready to accept the electric seamer.

Metal Roof and Wall Systems

Houston, TX 877-713-6224
Adel, GA 888-446-6224
Atlanta, GA 877-512-6224
Atwater, CA 800-829-9324
Dallas, TX 800-653-6224
Indianapolis, IN 800-735-6224
Jackson, MS 800-622-4136
Lubbock, TX 800-758-6224
Memphis, TN 800-206-6224
Oklahoma City, OK 800-597-6224
Omaha, NE 800-458-6224
Phoenix, AZ 888-533-6224
Richmond, VA 800-729-6224
Rome, NY 800-559-6224
Salt Lake City, UT 800-874-2404
San Antonio, TX 800-598-6224

INSTALLATION SEQUENCE

SuperLok®

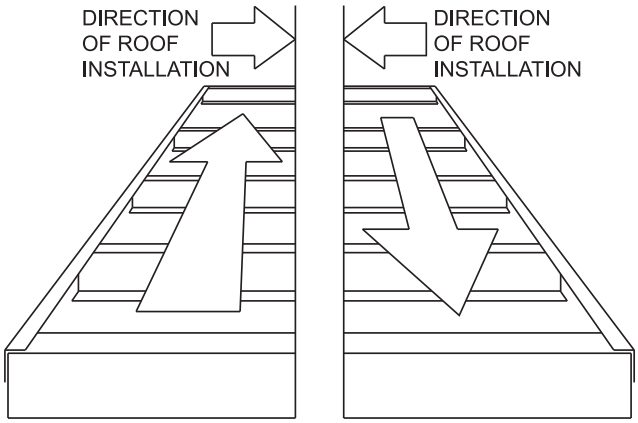

STEP 12 CONT.

SEAMING OPERATION (Continued)

The electric seamer will run in one direction only. To determine the direction of the seamer, stand at the eave and look upslope. If the roof is being installed left to right, the seamer will run upslope. If the roof is being installed right to left, the seamer will run downslope, An orientation plate is on the seamer to assist you in placing the seamer onto the seam properly. **When the roof has endlaps, the panels will always be installed right to left. When the roof slope is 6 on 12 or greater, panels must run right to left.**

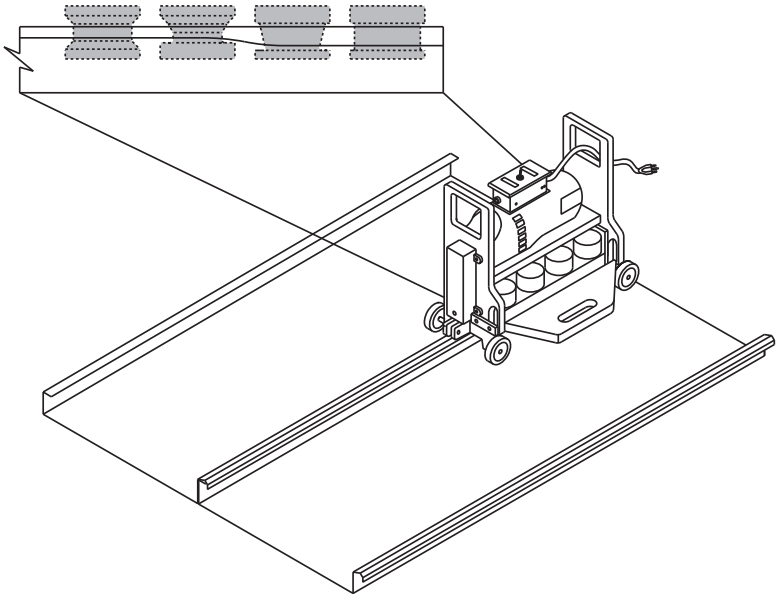

To begin seaming, set seamer on seam with the locking bar up and to the open side of the seam. The rear wheels should be even with the edge of the roof panel. Push the locking bar down to engage the rolls and turn the seamer on.

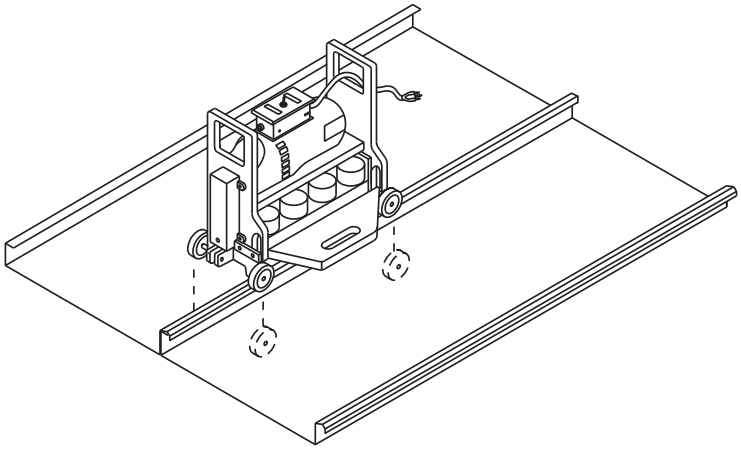

Stop seamer about one foot from end of panels. Disengage locking bar and remove the electric seamer. Finish seam with hand tool.

CAUTION

- Seamer operation should be closely supervised at all times.
- A safety line should be attached to the seamer.
- Do not entangle the electrical cords in the seamer tooling while it is in operation. This could cause serious injury or death to the operator and severely damage the seamer.
- Electrical cords should be 10-gauge to provide power to the seamer and never be over 200 feet from the electrical source.

Houston, TX 877-713-6224
Adel, GA 888-446-6224
Atlanta, GA 877-512-6224
Atwater, CA 800-829-9324
Dallas, TX 800-653-6224
Indianapolis, IN 800-735-6224
Jackson, MS 800-622-4136
Lubbock, TX 800-758-6224
Memphis, TN 800-206-6224
Oklahoma City, OK 800-597-6224
Omaha, NE 800-458-6224
Phoenix, AZ 888-533-6224
Richmond, VA 800-729-6224
Rome, NY 800-559-6224
Salt Lake City, UT 800-874-2404
San Antonio, TX 800-598-6224

MBCI®
Metal Roof and Wall Systems

SuperLok® INSTALLATION SEQUENCE

STEP 13

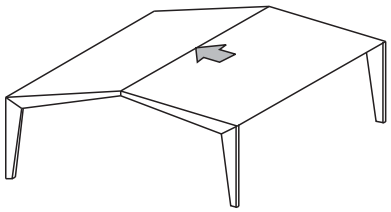

OUTSIDE CLOSURE INSTALLATION

Panels must be seamed before closures can be installed. Install Tri-Bead tape sealer across full width of panels, including under panel seams at ridge. Center of tape sealer should be 1½" from end of panels.

Field cut the end of the outside closure that fits to the open side of the panel seam. Notch and bend the vertical leg of the closure above the end tab back to the dimple formed into the closure. It is important that the closures fit tight to the panel seams to prevent the need for excess urethane sealant at this location.

Install outside closures by rotating the end cut for the panel seam into place first. Then rotate the other end of the outside closure into place. The vertical leg of the outside closure should be 2" from the upslope end of the panel. Attach the outside closure to the panel with Fastener #17 at each prepunched hole in the closure. Before installing the next outside closure, install a piece of Tri-Bead tape sealer onto the top flange of the outside closure previously installed. This is to prevent water being blown between the outside closures where the top flanges overlap. After all closures are in place, install Tri-Bead tape sealer across the top flange.

Use urethane sealant to fill any voids around the panel seams on the upslope side of the outside closures.

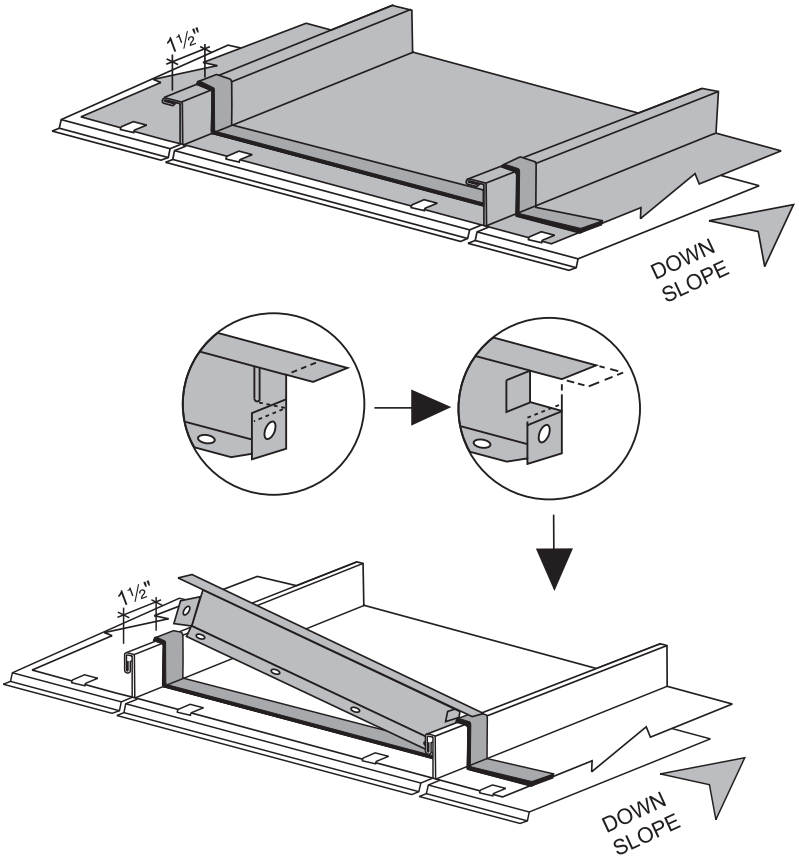

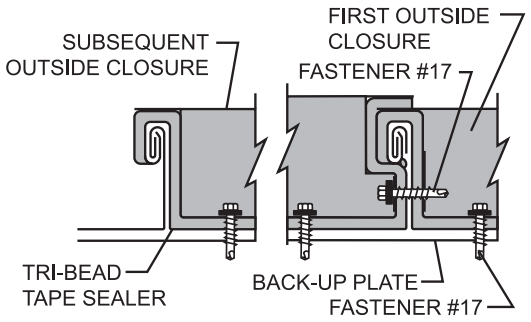

MBCI®
Metal Roof and Wall Systems

Houston, TX 877-713-6224
Adel, GA 888-446-6224
Atlanta, GA 877-512-6224
Atwater, CA 800-829-9324
Dallas, TX 800-653-6224
Indianapolis, IN 800-735-6224
Jackson, MS 800-622-4136
Lubbock, TX 800-758-6224
Memphis, TN 800-206-6224
Oklahoma City, OK 800-597-6224
Omaha, NE 800-458-6224
Phoenix, AZ 888-533-6224
Richmond, VA 800-729-6224
Rome, NY 800-559-6224
Salt Lake City, UT 800-874-2404
San Antonio, TX 800-598-6224

SPECIAL ERECTION TECHNIQUES — SuperLok®

UL 90 LIGHT TRANSMITTING PANEL INSTALLATION

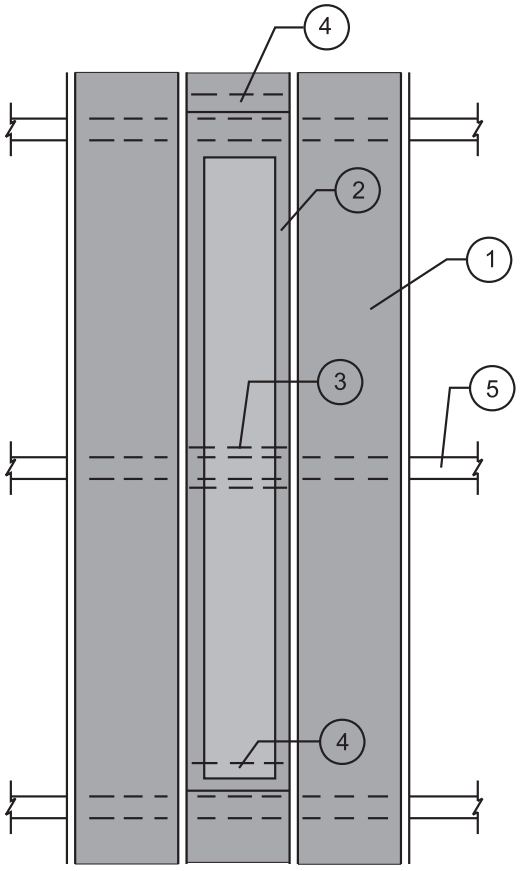

1. **SuperLok® PANEL**
2. **SuperLok® LIGHT TRANSMITTING PANEL**
3. **LIGHT TRANSMITTING PANEL STIFFENER PLATE**
4. **BACK-UP PLATE**
5. **PURLIN**

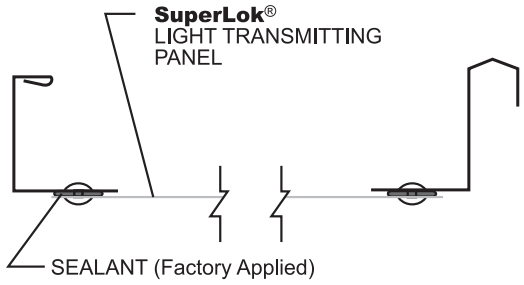

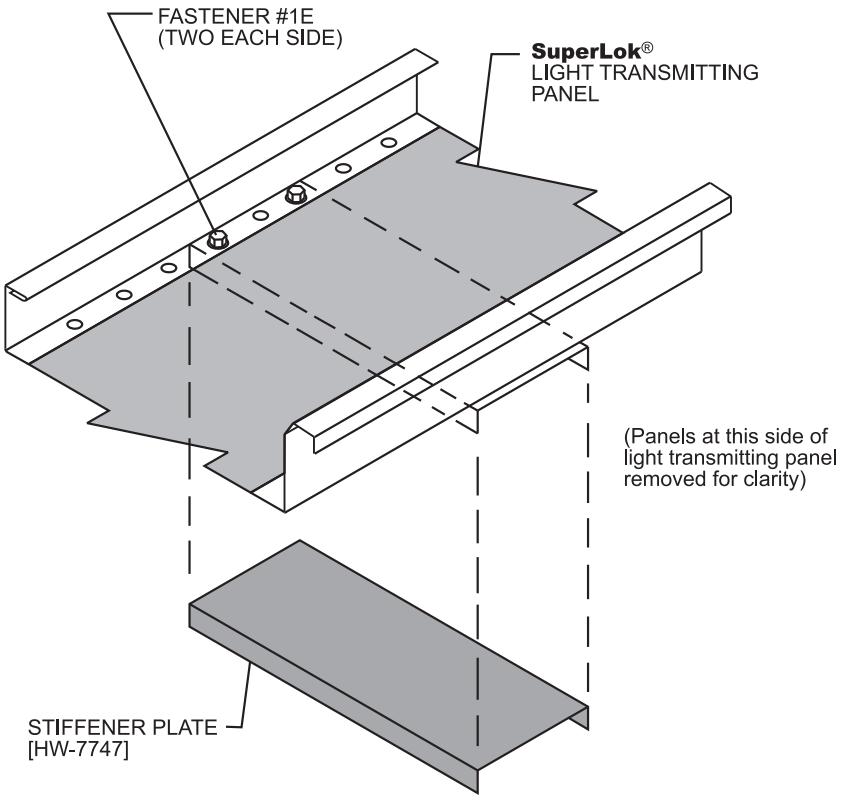

NOTES:

1. Maximum width of purlin flange to be 3½".
2. Stiffener plate is to be field installed on bottom side of light transmitting panel over mid-purlin.
3. Light transmitting panel rivets that obstruct stiffener plate must be drilled out and replaced with Fastener #1E. Minimum two fasteners per side.
4. Stiffener plate must be centered exactly over mid-purlin so that thermal movement of the system is not restrained by the purlin.
5. Endlaps created by the use of light transmitting panels require roof erection to proceed from right to left as viewed from the eave looking toward the ridge.
6. **WARNING: It is the user's responsibility to ensure that the installation and use of all light transmitting panels comply with State, Federal and OSHA regulations and laws, including, but not limited to, guarding all light transmitting panels with screens, fixed standard railings, or other acceptable safety controls that prevent fall-through.**

Houston, TX 877-713-6224
Adel, GA 888-446-6224
Atlanta, GA 877-512-6224
Atwater, CA 800-829-9324
Dallas, TX 800-653-6224
Indianapolis, IN 800-735-6224
Jackson, MS 800-622-4136
Lubbock, TX 800-758-6224
Memphis, TN 800-206-6224
Oklahoma City, OK 800-597-6224
Omaha, NE 800-458-6224
Phoenix, AZ 888-533-6224
Richmond, VA 800-729-6224
Rome, NY 800-559-6224
Salt Lake City, UT 800-874-2404
San Antonio, TX 800-598-6224

MBCI®
Metal Roof and Wall Systems

SuperLok® SPECIAL ERECTION TECHNIQUES

CURB INSTALLATION
FLOATING ROOF CURB SUPPORT GUIDE

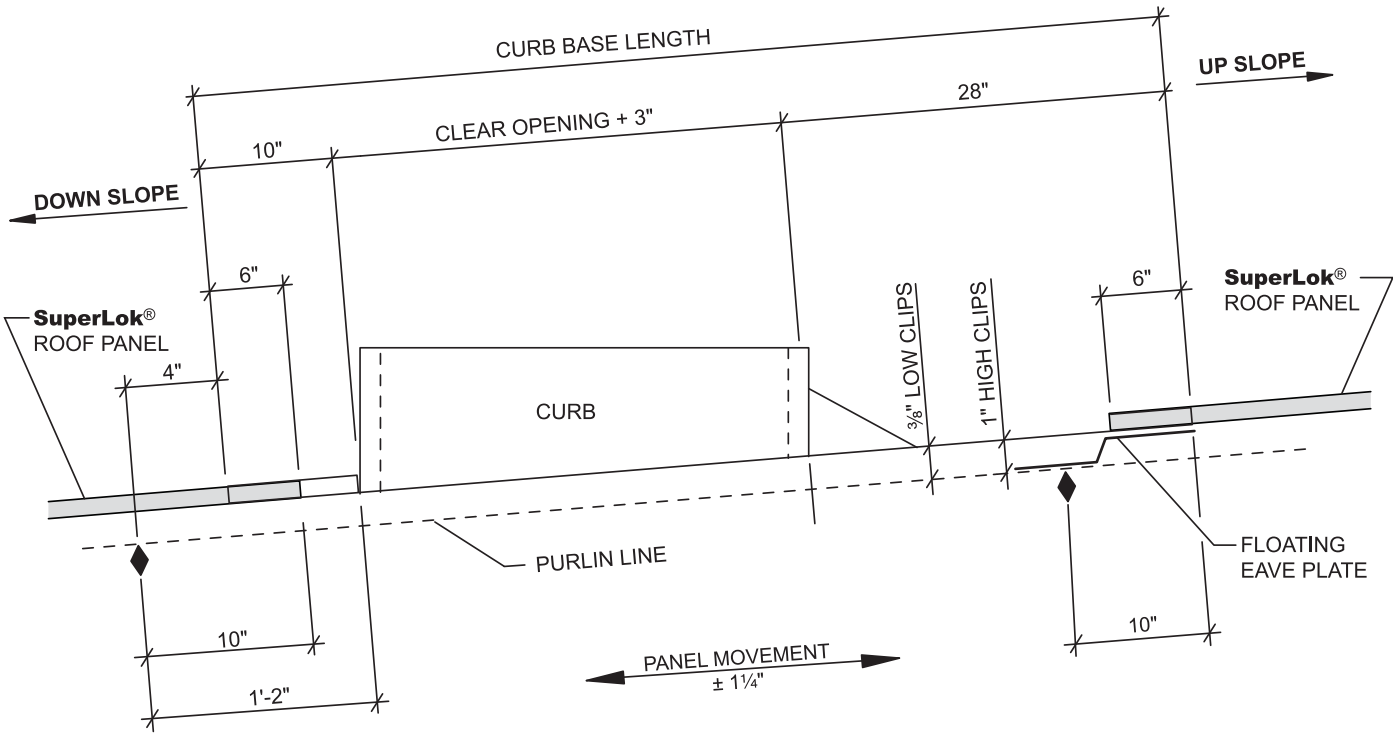

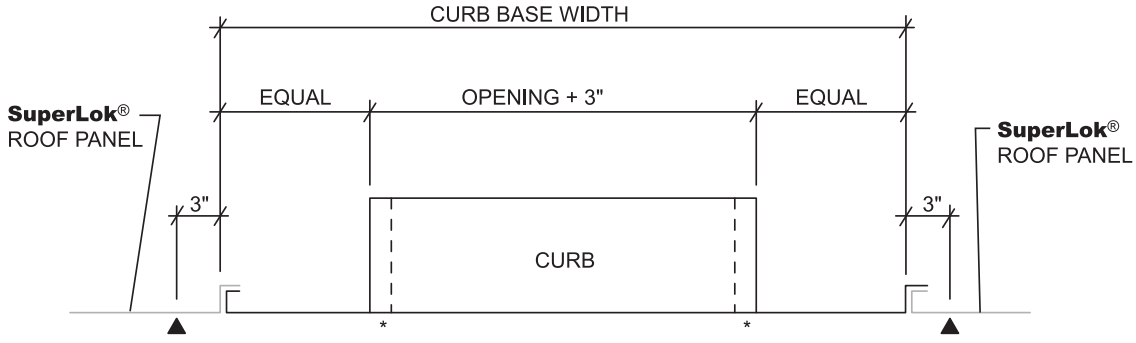

♦ INDICATES ROOF PANEL SUPPORTS
▲ INDICATES CURB BASE SUPPORTS
* ADDITIONAL UPLIFT SUPPORTS ARE REQUIRED FOR THE ATTACHMENT OF THE CURB UP LIFT PLATES ONLY.

CAUTION

It is the user's responsibility to ensure that openings cut into the roof for installation of roof curbs comply with State, Federal and OSHA regulations and laws, including, but not limited to, guarding roof openings with plywood, fixed standard railings, or other acceptable safety controls that prevent fall-through.

MBCI®
Metal Roof and Wall Systems

Houston, TX 877-713-6224
Adel, GA 888-446-6224
Atlanta, GA 877-512-6224
Atwater, CA 800-829-9324
Dallas, TX 800-653-6224
Indianapolis, IN 800-735-6224
Jackson, MS 800-622-4136
Lubbock, TX 800-758-6224
Memphis, TN 800-206-6224
Oklahoma City, OK 800-597-6224
Omaha, NE 800-458-6224
Phoenix, AZ 888-533-6224
Richmond, VA 800-729-6224
Rome, NY 800-559-6224
Salt Lake City, UT 800-874-2404
San Antonio, TX 800-598-6224

SPECIAL ERECTION TECHNIQUES

SuperLok®

CURB INSTALLATION
CURB BASE INSTALLATION #1

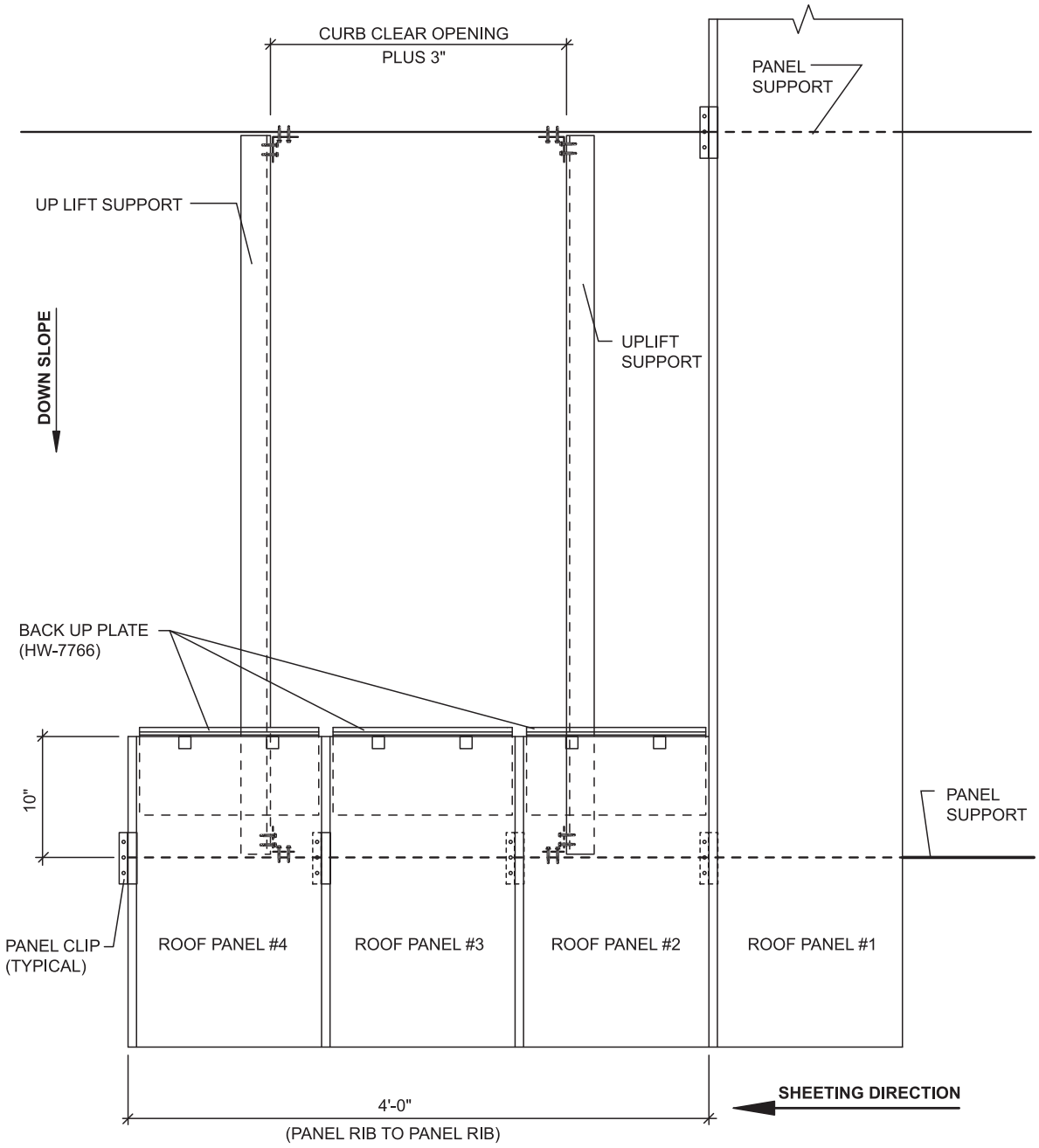

NOTES:

1. Install all lower roof panels to support the curb base.
2. Install back up plates.

CAUTION

It is the user's responsibility to ensure that openings cut into the roof for installation of roof curbs comply with State, Federal and OSHA regulations and laws, including, but not limited to, guarding roof openings with plywood, fixed standard railings, or other acceptable safety controls that prevent fall-through.

Houston, TX 877-713-6224
Adel, GA 888-446-6224
Atlanta, GA 877-512-6224
Atwater, CA 800-829-9324
Dallas, TX 800-653-6224
Indianapolis, IN 800-735-6224
Jackson, MS 800-622-4136
Lubbock, TX 800-758-6224
Memphis, TN 800-206-6224
Oklahoma City, OK 800-597-6224
Omaha, NE 800-458-6224
Phoenix, AZ 888-533-6224
Richmond, VA 800-729-6224
Rome, NY 800-559-6224
Salt Lake City, UT 800-874-2404
San Antonio, TX 800-598-6224

MBCI®
Metal Roof and Wall Systems

SuperLok® SPECIAL ERECTION TECHNIQUES

CURB INSTALLATION
CURB BASE INSTALLATION #2

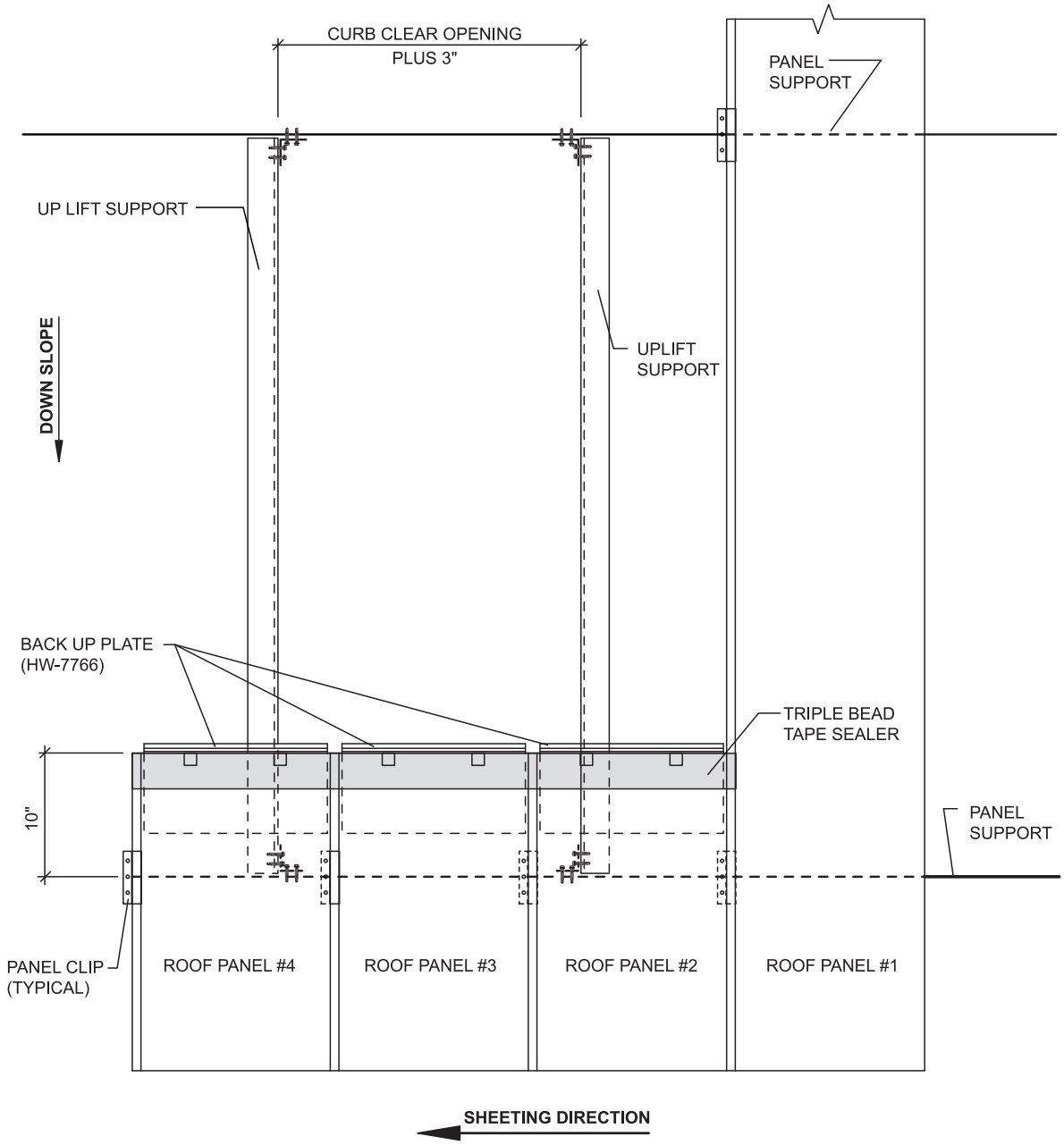

NOTES:

1. Apply Triple Bead tape sealer (HW-502) on roof panels as shown

CAUTION

It is the user's responsibility to ensure that openings cut into the roof for installation of roof curbs comply with State, Federal and OSHA regulations and laws, including, but not limited to, guarding roof openings with plywood, fixed standard railings, or other acceptable safety controls that prevent fall-through.

MBCI®
Metal Roof and Wall Systems

Houston, TX 877-713-6224
Adel, GA 888-446-6224
Atlanta, GA 877-512-6224
Atwater, CA 800-829-9324
Dallas, TX 800-653-6224
Indianapolis, IN 800-735-6224
Jackson, MS 800-622-4136
Lubbock, TX 800-758-6224
Memphis, TN 800-206-6224
Oklahoma City, OK 800-597-6224
Omaha, NE 800-458-6224
Phoenix, AZ 888-533-6224
Richmond, VA 800-729-6224
Rome, NY 800-559-6224
Salt Lake City, UT 800-874-2404
San Antonio, TX 800-598-6224

SPECIAL ERECTION TECHNIQUES — SuperLok®

CURB INSTALLATION
CURB BASE INSTALLATION #3

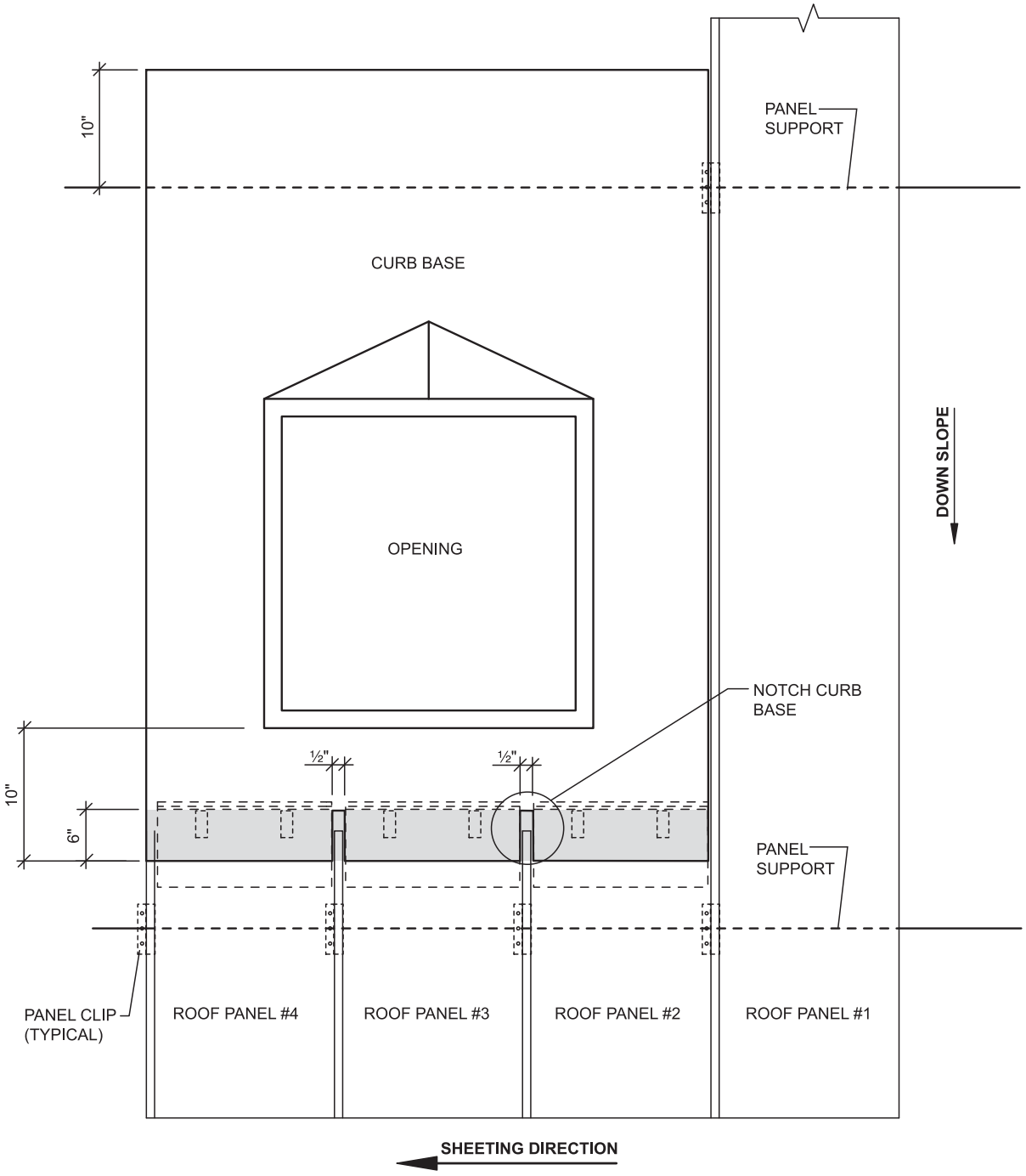

NOTES:

1. For field located Panel Fin Caps, notch Curb Base at all panel Fins.
2. Install Curb Base on lower roof panels with a 3" End Lap.

CAUTION

It is the user's responsibility to ensure that openings cut into the roof for installation of roof curbs comply with State, Federal and OSHA regulations and laws, including, but not limited to, guarding roof openings with plywood, fixed standard railings, or other acceptable safety controls that prevent fall-through.

Houston, TX 877-713-6224
Adel, GA 888-446-6224
Atlanta, GA 877-512-6224
Atwater, CA 800-829-9324
Dallas, TX 800-653-6224
Indianapolis, IN 800-735-6224
Jackson, MS 800-622-4136
Lubbock, TX 800-758-6224
Memphis, TN 800-206-6224
Oklahoma City, OK 800-597-6224
Omaha, NE 800-458-6224
Phoenix, AZ 888-533-6224
Richmond, VA 800-729-6224
Rome, NY 800-559-6224
Salt Lake City, UT 800-874-2404
San Antonio, TX 800-598-6224

MBCI®
Metal Roof and Wall Systems

SuperLok® SPECIAL ERECTION TECHNIQUES

CURB INSTALLATION
CURB BASE INSTALLATION #4

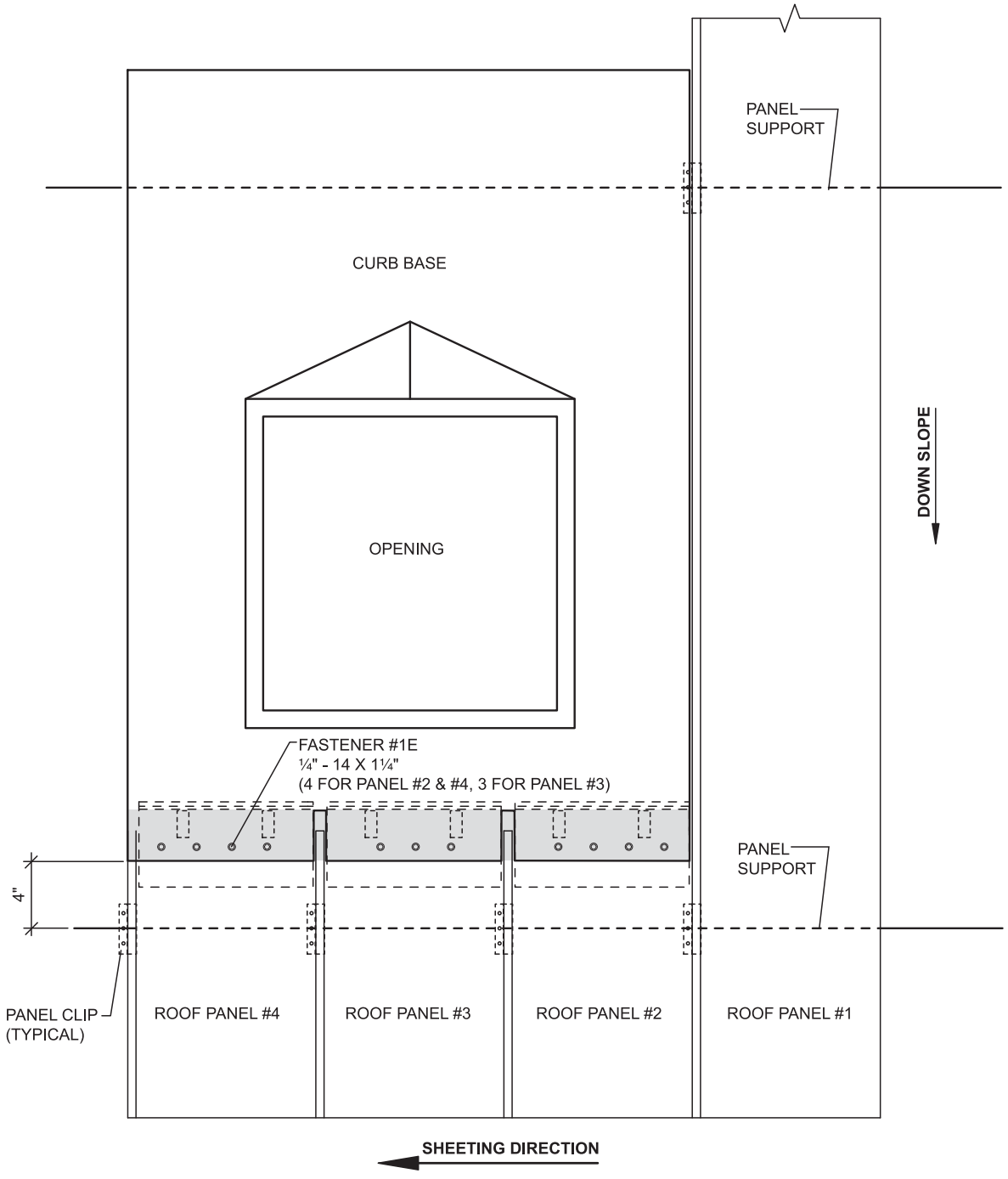

NOTES:

1. Attach the Curb Base to the roof panels.

CAUTION

It is the user's responsibility to ensure that openings cut into the roof for installation of roof curbs comply with State, Federal and OSHA regulations and laws, including, but not limited to, guarding roof openings with plywood, fixed standard railings, or other acceptable safety controls that prevent fall-through.

Metal Roof and Wall Systems

Houston, TX 877-713-6224
Adel, GA 888-446-6224
Atlanta, GA 877-512-6224
Atwater, CA 800-829-9324
Dallas, TX 800-653-6224
Indianapolis, IN 800-735-6224
Jackson, MS 800-622-4136
Lubbock, TX 800-758-6224
Memphis, TN 800-206-6224
Oklahoma City, OK 800-597-6224
Omaha, NE 800-458-6224
Phoenix, AZ 888-533-6224
Richmond, VA 800-729-6224
Rome, NY 800-559-6224
Salt Lake City, UT 800-874-2404
San Antonio, TX 800-598-6224

SPECIAL ERECTION TECHNIQUES

SuperLok®

CURB INSTALLATION
CAP CELL INSTALLATION

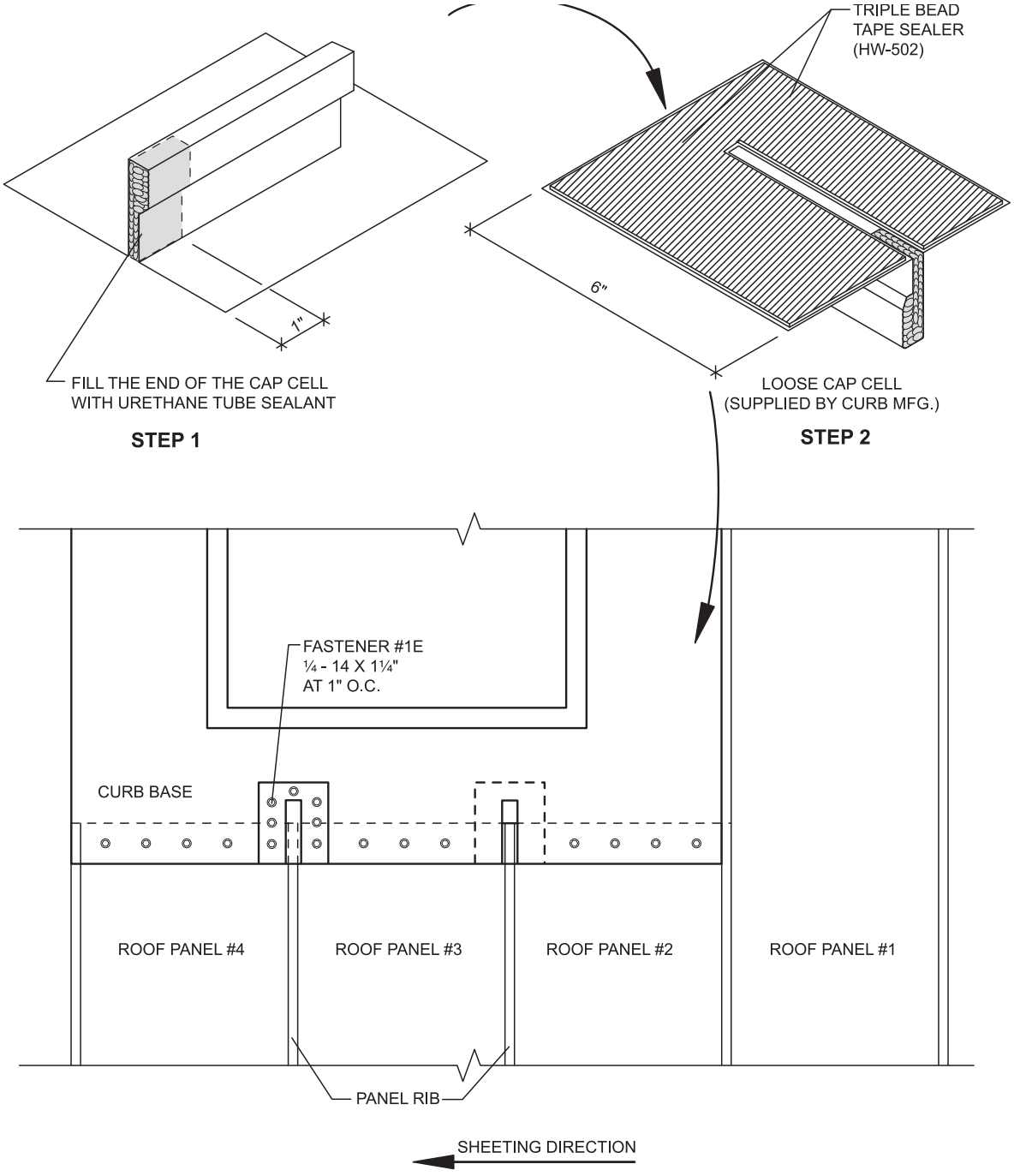

NOTES:

Fill Fin cavity of Cap Cell with Urethane Tube Sealant. Apply Triple Bead tape sealer (HW-502) on the bottom of (2) loose the Cap Cell, install over the panel Fins and attach with (6) Fastener #1E.

CAUTION

It is the user's responsibility to ensure that openings cut into the roof for installation of roof curbs comply with State, Federal and OSHA regulations and laws, including, but not limited to, guarding roof openings with plywood, fixed standard railings, or other acceptable safety controls that prevent fall-through.

Houston, TX 877-713-6224
Adel, GA 888-446-6224
Atlanta, GA 877-512-6224
Atwater, CA 800-829-9324
Dallas, TX 800-653-6224
Indianapolis, IN 800-735-6224
Jackson, MS 800-622-4136
Lubbock, TX 800-758-6224
Memphis, TN 800-206-6224
Oklahoma City, OK 800-597-6224
Omaha, NE 800-458-6224
Phoenix, AZ 888-533-6224
Richmond, VA 800-729-6224
Rome, NY 800-559-6224
Salt Lake City, UT 800-874-2404
San Antonio, TX 800-598-6224

MBCI®
Metal Roof and Wall Systems

SuperLok® SPECIAL ERECTION TECHNIQUES

CURB INSTALLATION
CURB PANEL FIN PREPARATION

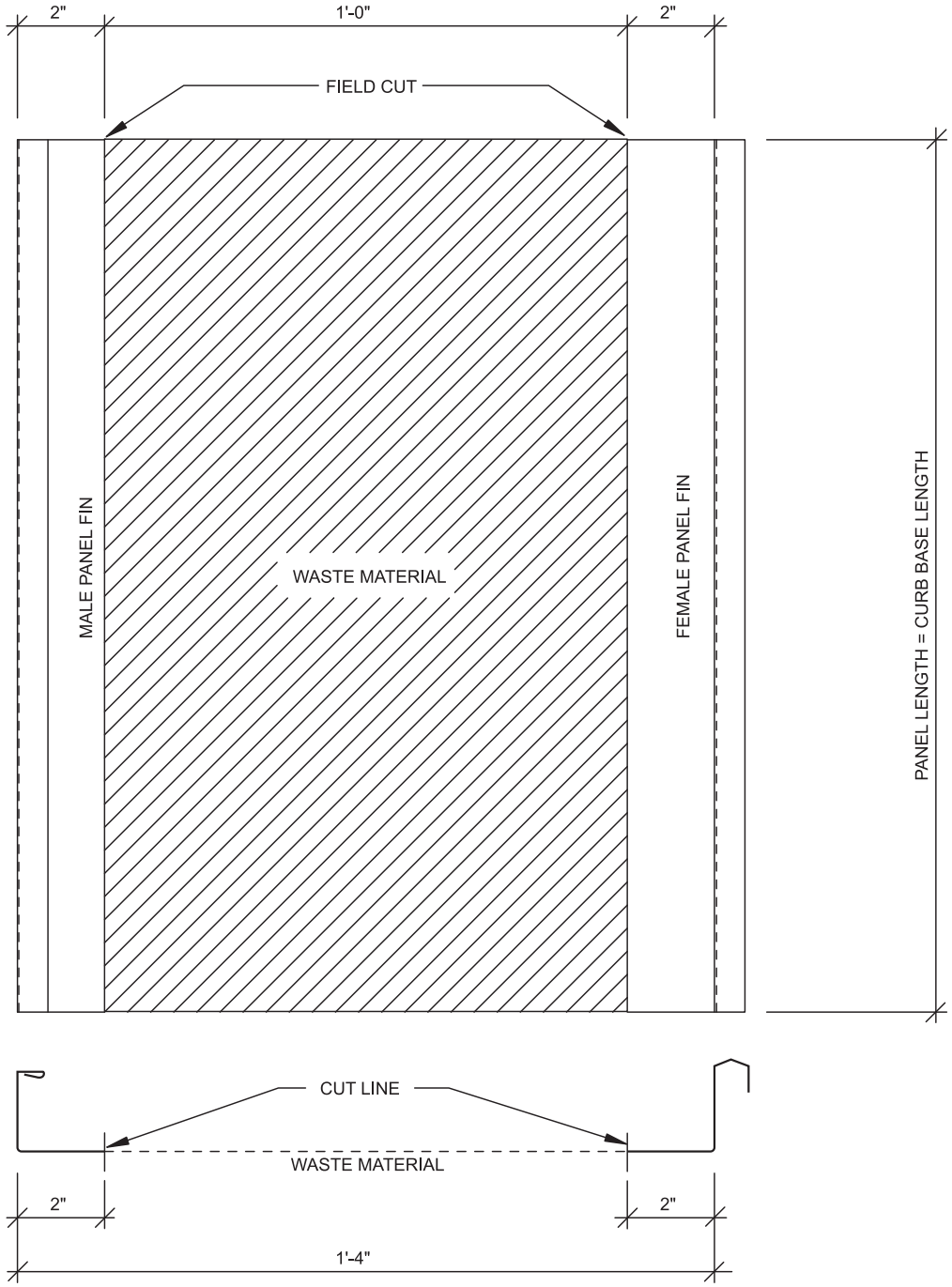

NOTES:

Field cut male and female panel ribs from an extra roof panel supplied by the building manufacturer.

CAUTION

It is the user's responsibility to ensure that openings cut into the roof for installation of roof curbs comply with State, Federal and OSHA regulations and laws, including, but not limited to, guarding roof openings with plywood, fixed standard railings, or other acceptable safety controls that prevent fall-through.

MBCI®
Metal Roof and Wall Systems

Houston, TX 877-713-6224
Adel, GA 888-446-6224
Atlanta, GA 877-512-6224
Atwater, CA 800-829-9324
Dallas, TX 800-653-6224
Indianapolis, IN 800-735-6224
Jackson, MS 800-622-4136
Lubbock, TX 800-758-6224
Memphis, TN 800-206-6224
Oklahoma City, OK 800-597-6224
Omaha, NE 800-458-6224
Phoenix, AZ 888-533-6224
Richmond, VA 800-729-6224
Rome, NY 800-559-6224
Salt Lake City, UT 800-874-2404
San Antonio, TX 800-598-6224

SPECIAL ERECTION TECHNIQUES — SuperLok®

CURB INSTALLATION
FEMALE PANEL FIN INSTALLATION

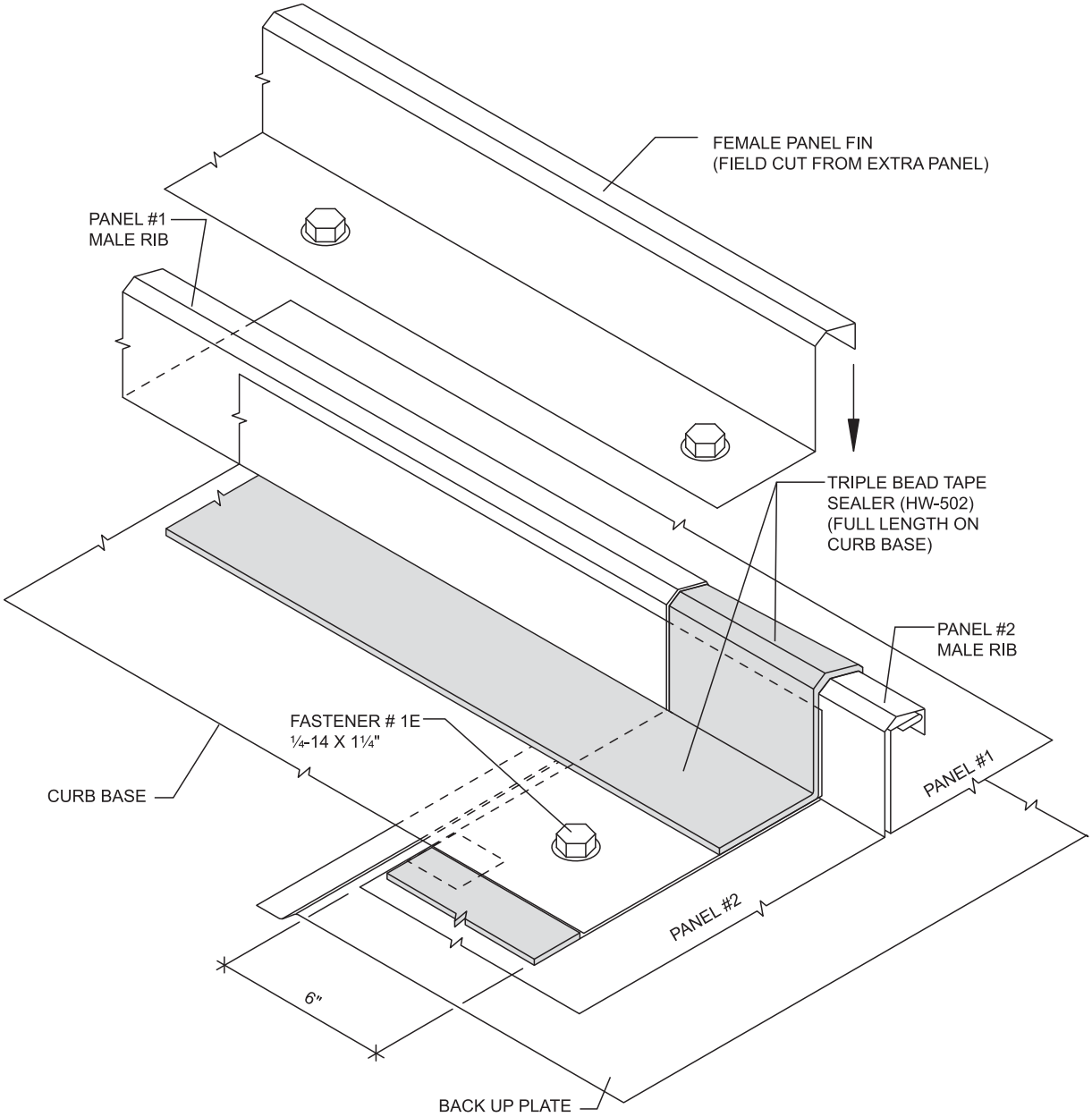

NOTES:

1. Install Triple Bead tape sealer (HW-502) to panel #2 Male Fin, and along the edge of the Curb Base.
2. Install the Female Panel Rib over the tape sealer and attach with Fastener # 1E at 12" O.C.

CAUTION

It is the user's responsibility to ensure that openings cut into the roof for installation of roof curbs comply with State, Federal and OSHA regulations and laws, including, but not limited to, guarding roof openings with plywood, fixed standard railings, or other acceptable safety controls that prevent fall-through.

Houston, TX 877-713-6224
Adel, GA 888-446-6224
Atlanta, GA 877-512-6224
Atwater, CA 800-829-9324
Dallas, TX 800-653-6224
Indianapolis, IN 800-735-6224
Jackson, MS 800-622-4136
Lubbock, TX 800-758-6224
Memphis, TN 800-206-6224
Oklahoma City, OK 800-597-6224
Omaha, NE 800-458-6224
Phoenix, AZ 888-533-6224
Richmond, VA 800-729-6224
Rome, NY 800-559-6224
Salt Lake City, UT 800-874-2404
San Antonio, TX 800-598-6224

MBCI®
Metal Roof and Wall Systems

SuperLok® SPECIAL ERECTION TECHNIQUES

CURB INSTALLATION
MALE PANEL FIN INSTALLATION

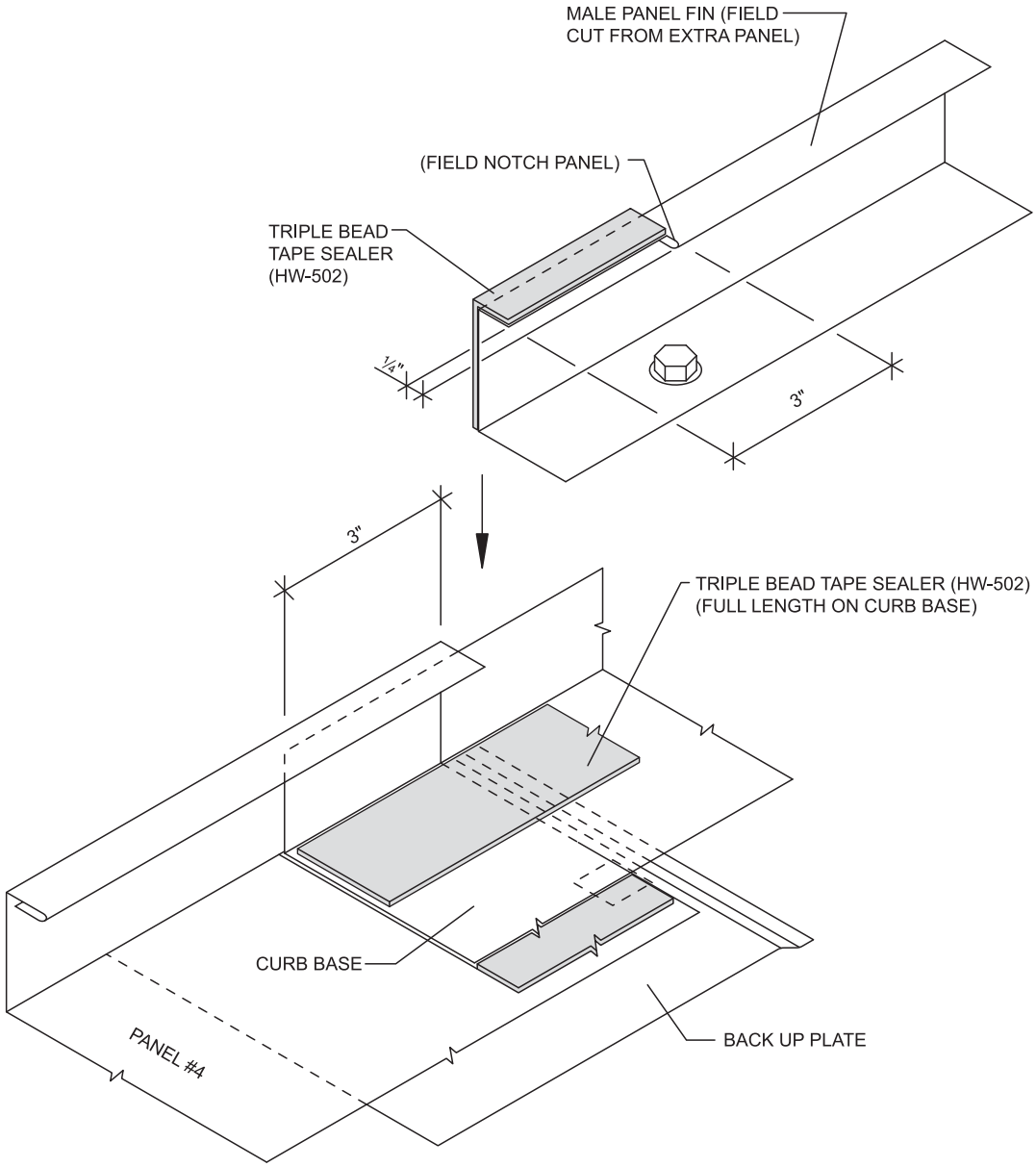

NOTES:

1. Notch the male Panel Fin. Apply Triple Bead tape sealer (HW-502) to the top and side of the Male Panel Fin.
2. Apply Triple Bead tape sealer on the Curb Base under the male Panel Fin.
3. Insert the field cut male Panel Fin on top of the Triple Bead tape sealer.

CAUTION

It is the user's responsibility to ensure that openings cut into the roof for installation of roof curbs comply with State, Federal and OSHA regulations and laws, including, but not limited to, guarding roof openings with plywood, fixed standard railings, or other acceptable safety controls that prevent fall-through.

MBCI®
Metal Roof and Wall Systems

Houston, TX 877-713-6224
Adel, GA 888-446-6224
Atlanta, GA 877-512-6224
Atwater, CA 800-829-9324
Dallas, TX 800-653-6224
Indianapolis, IN 800-735-6224
Jackson, MS 800-622-4136
Lubbock, TX 800-758-6224
Memphis, TN 800-206-6224
Oklahoma City, OK 800-597-6224
Omaha, NE 800-458-6224
Phoenix, AZ 888-533-6224
Richmond, VA 800-729-6224
Rome, NY 800-559-6224
Salt Lake City, UT 800-874-2404
San Antonio, TX 800-598-6224

SPECIAL ERECTION TECHNIQUES

SuperLok®

CURB INSTALLATION
CURB BASE INSTALLATION #5

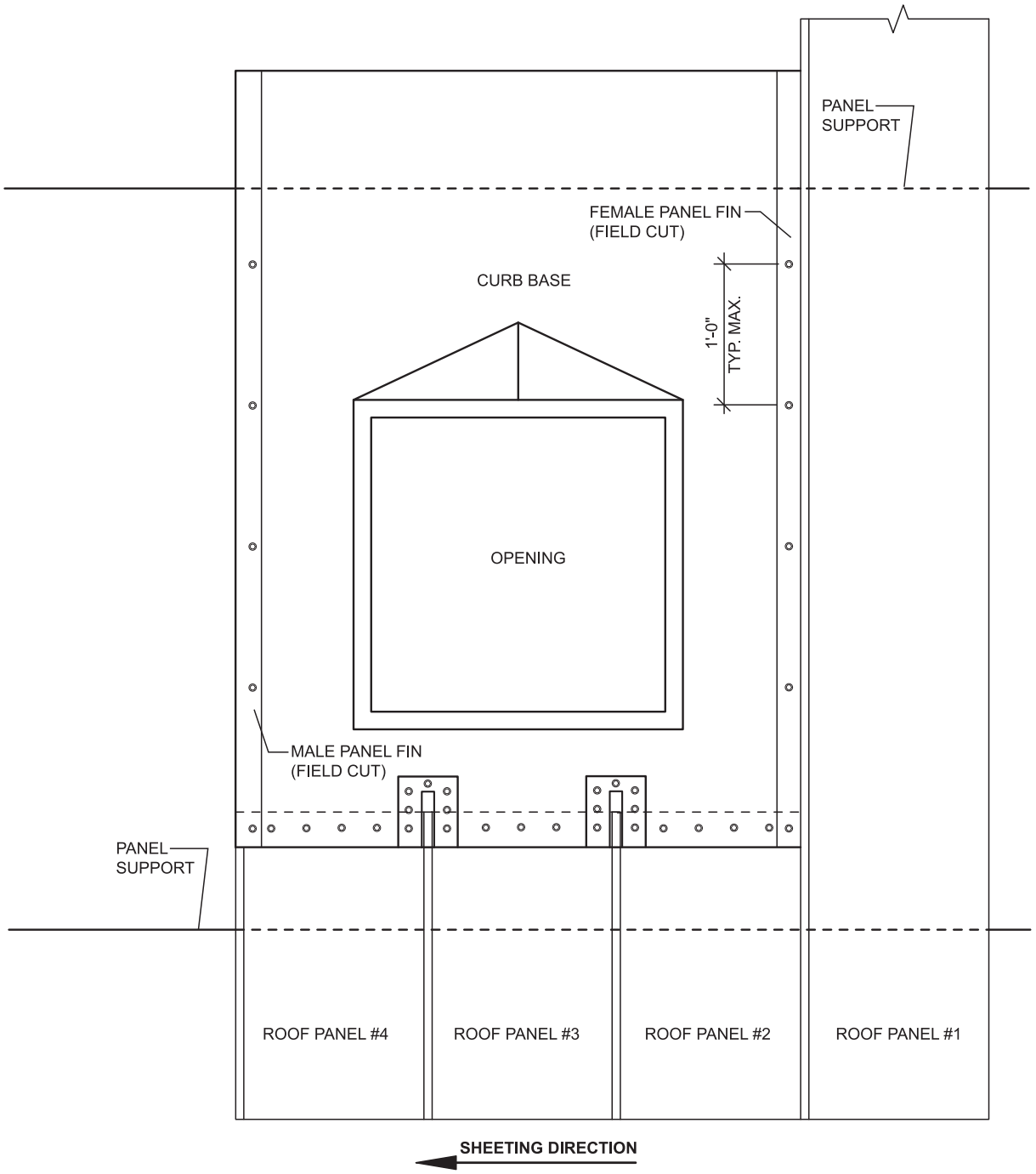

CAUTION

It is the user's responsibility to ensure that openings cut into the roof for installation of roof curbs comply with State, Federal and OSHA regulations and laws, including, but not limited to, guarding roof openings with plywood, fixed standard railings, or other acceptable safety controls that prevent fall-through.

Houston, TX 877-713-6224
Adel, GA 888-446-6224
Atlanta, GA 877-512-6224
Atwater, CA 800-829-9324
Dallas, TX 800-653-6224
Indianapolis, IN 800-735-6224
Jackson, MS 800-622-4136
Lubbock, TX 800-758-6224
Memphis, TN 800-206-6224
Oklahoma City, OK 800-597-6224
Omaha, NE 800-458-6224
Phoenix, AZ 888-533-6224
Richmond, VA 800-729-6224
Rome, NY 800-559-6224
Salt Lake City, UT 800-874-2404
San Antonio, TX 800-598-6224

MBCI®
Metal Roof and Wall Systems

SuperLok® SPECIAL ERECTION TECHNIQUES

CURB INSTALLATION
CURB BASE INSTALLATION #6

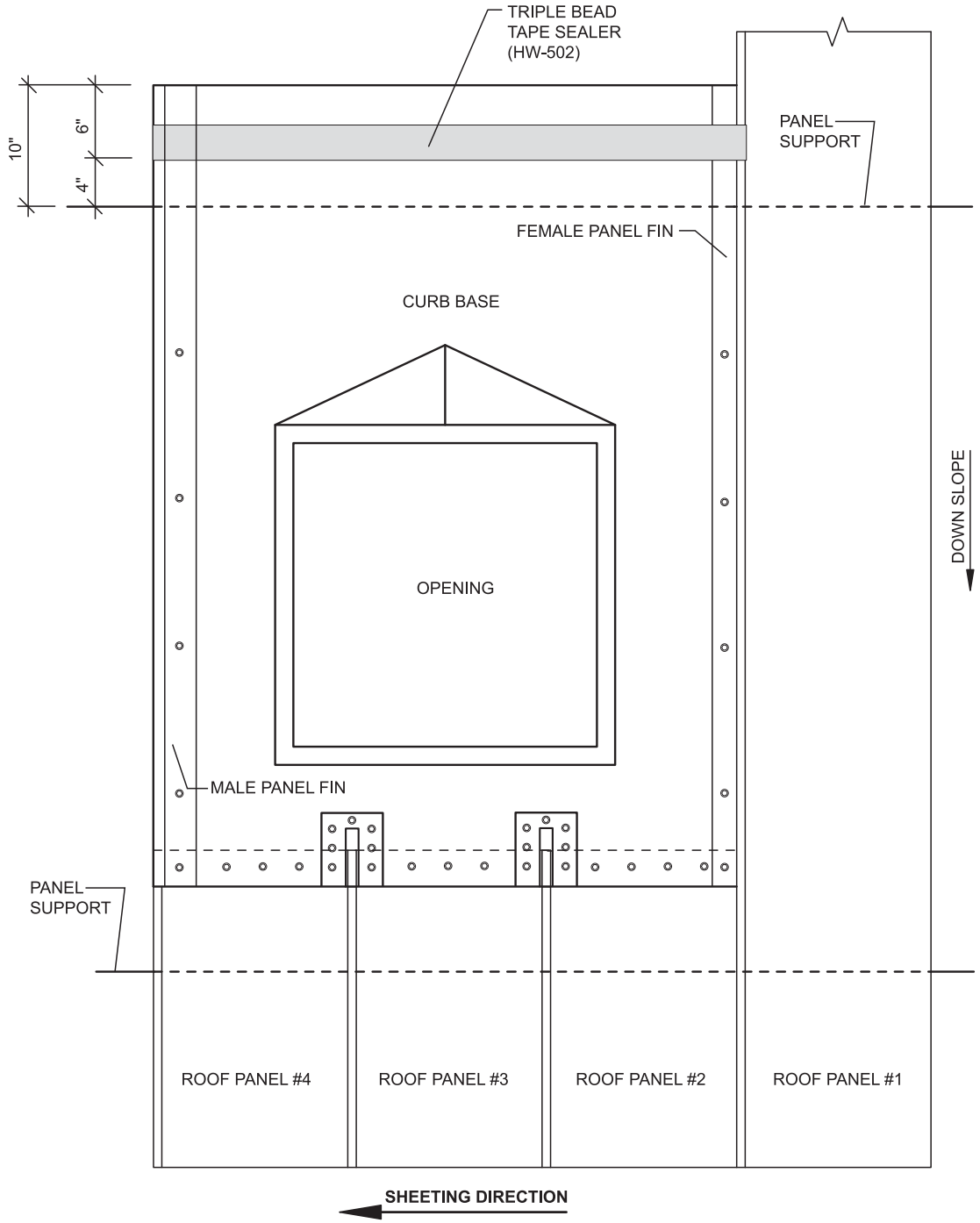

NOTES:

Apply Triple Bead tape sealer (HW-502) on Curb Base at the up hill end.

CAUTION

It is the user's responsibility to ensure that openings cut into the roof for installation of roof curbs comply with State, Federal and OSHA regulations and laws, including, but not limited to, guarding roof openings with plywood, fixed standard railings, or other acceptable safety controls that prevent fall-through.

MBCI®
Metal Roof and Wall Systems

Houston, TX 877-713-6224
Adel, GA 888-446-6224
Atlanta, GA 877-512-6224
Atwater, CA 800-829-9324
Dallas, TX 800-653-6224
Indianapolis, IN 800-735-6224
Jackson, MS 800-622-4136
Lubbock, TX 800-758-6224
Memphis, TN 800-206-6224
Oklahoma City, OK 800-597-6224
Omaha, NE 800-458-6224
Phoenix, AZ 888-533-6224
Richmond, VA 800-729-6224
Rome, NY 800-559-6224
Salt Lake City, UT 800-874-2404
San Antonio, TX 800-598-6224

SPECIAL ERECTION TECHNIQUES

SuperLok®

CURB INSTALLATION
CURB BASE INSTALLATION #7

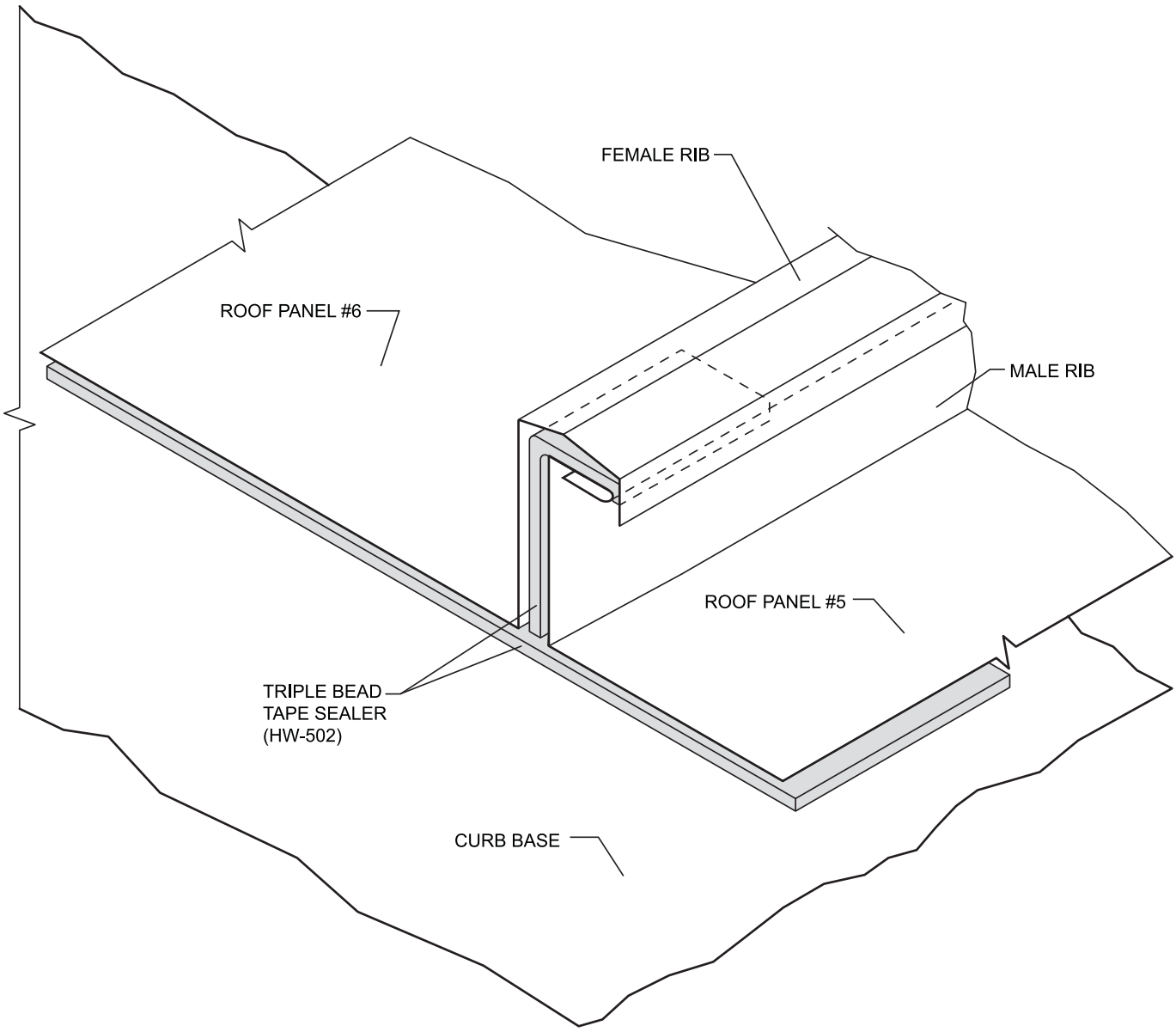

NOTES:

Apply Triple Bead tape sealer (HW-502) between the Panel Fins on Panels#5 and #6 for water seal.

CAUTION

It is the user's responsibility to ensure that openings cut into the roof for installation of roof curbs comply with State, Federal and OSHA regulations and laws, including, but not limited to, guarding roof openings with plywood, fixed standard railings, or other acceptable safety controls that prevent fall-through.

Houston, TX 877-713-6224
Adel, GA 888-446-6224
Atlanta, GA 877-512-6224
Atwater, CA 800-829-9324
Dallas, TX 800-653-6224
Indianapolis, IN 800-735-6224
Jackson, MS 800-622-4136
Lubbock, TX 800-758-6224
Memphis, TN 800-206-6224
Oklahoma City, OK 800-597-6224
Omaha, NE 800-458-6224
Phoenix, AZ 888-533-6224
Richmond, VA 800-729-6224
Rome, NY 800-559-6224
Salt Lake City, UT 800-874-2404
San Antonio, TX 800-598-6224

MBCI®
Metal Roof and Wall Systems

SuperLok® SPECIAL ERECTION TECHNIQUES

CURB INSTALLATION
CURB BASE INSTALLATION #8

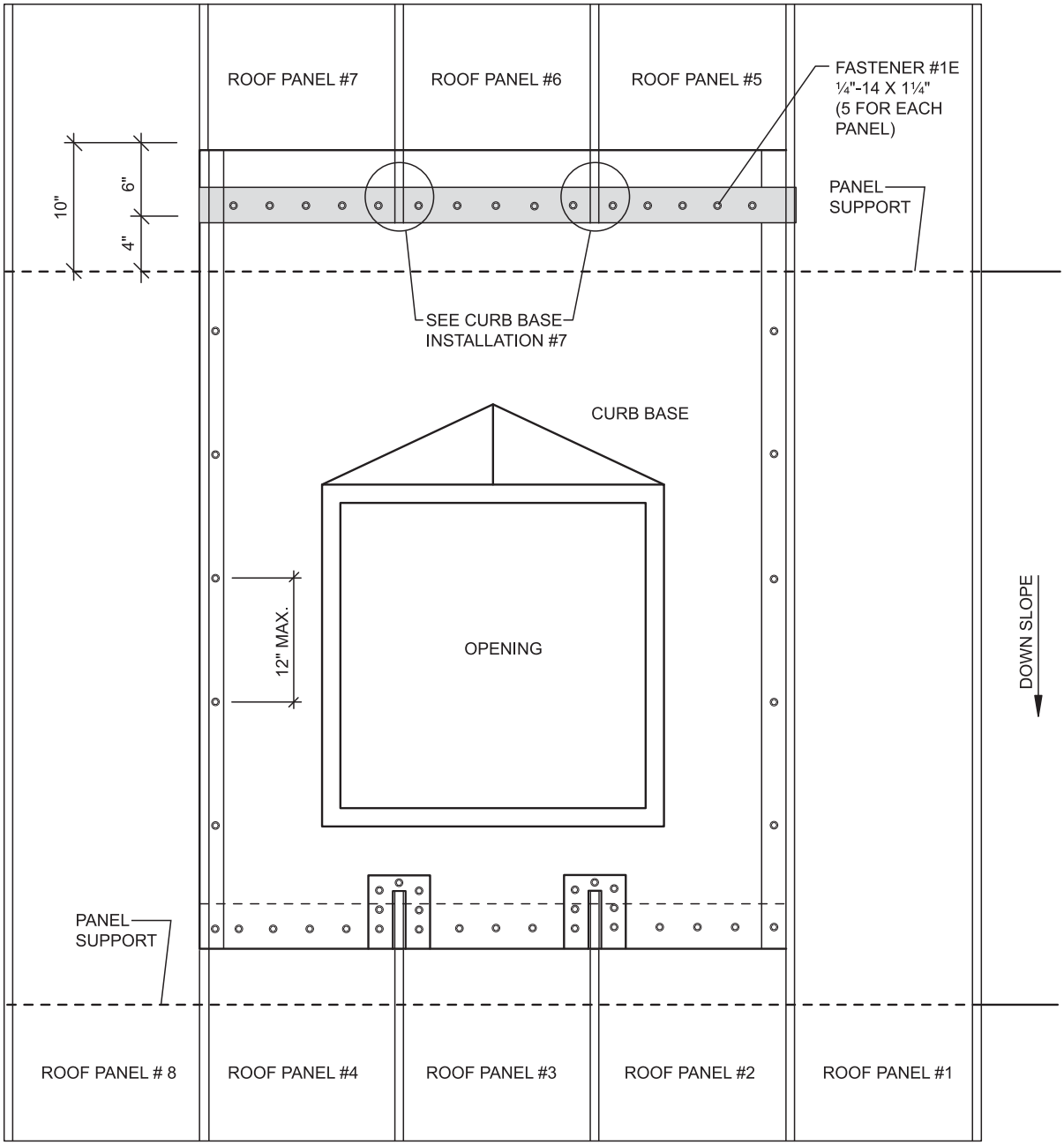

NOTES:

1. Install Roof Panels #5, #6, & #7 to the Curb Base on top of the tape sealer with Fastener #1E (5 per panel).
2. Install Roof Panel #8.

CAUTION

It is the user's responsibility to ensure that openings cut into the roof for installation of roof curbs comply with State, Federal and OSHA regulations and laws, including, but not limited to, guarding roof openings with plywood, fixed standard railings, or other acceptable safety controls that prevent fall-through.

MBCI®
Metal Roof and Wall Systems

Houston, TX 877-713-6224
Adel, GA 888-446-6224
Atlanta, GA 877-512-6224
Atwater, CA 800-829-9324
Dallas, TX 800-653-6224
Indianapolis, IN 800-735-6224
Jackson, MS 800-622-4136
Lubbock, TX 800-758-6224
Memphis, TN 800-206-6224
Oklahoma City, OK 800-597-6224
Omaha, NE 800-458-6224
Phoenix, AZ 888-533-6224
Richmond, VA 800-729-6224
Rome, NY 800-559-6224
Salt Lake City, UT 800-874-2404
San Antonio, TX 800-598-6224

SPECIAL ERECTION TECHNIQUES — SuperLok®

CURB INSTALLATION
UPLIFT PLATE DETAIL

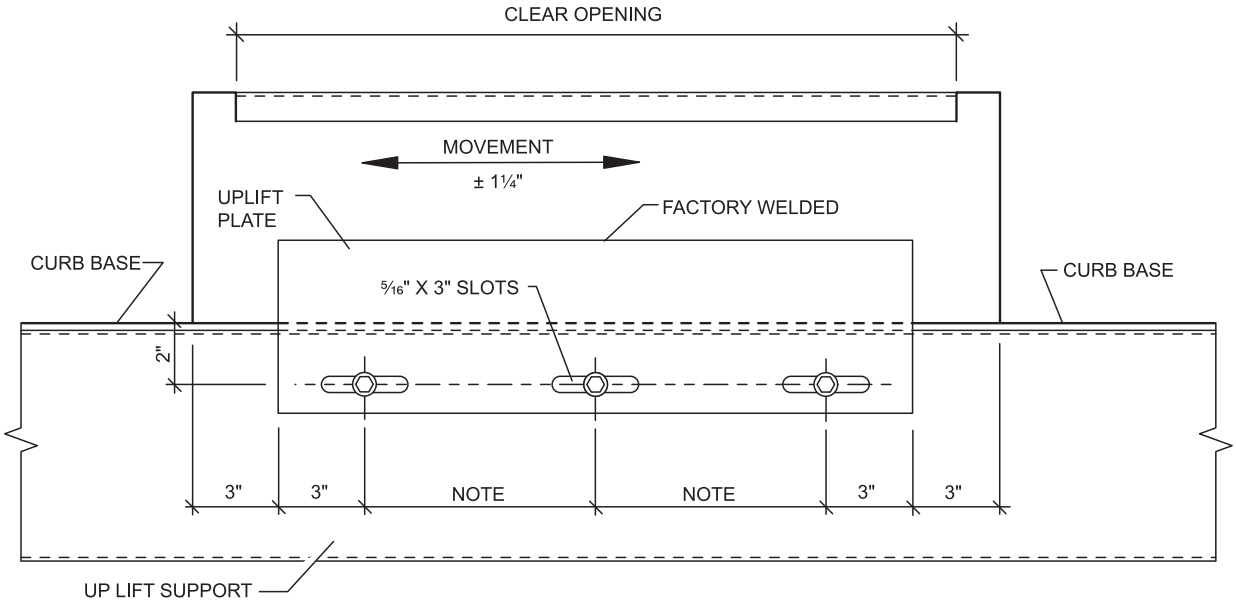

NOTE: SLOT LOCATION IS DETERMINED BY THE CURB LENGTH, MAXIMUM SPACING IS 12" O.C.

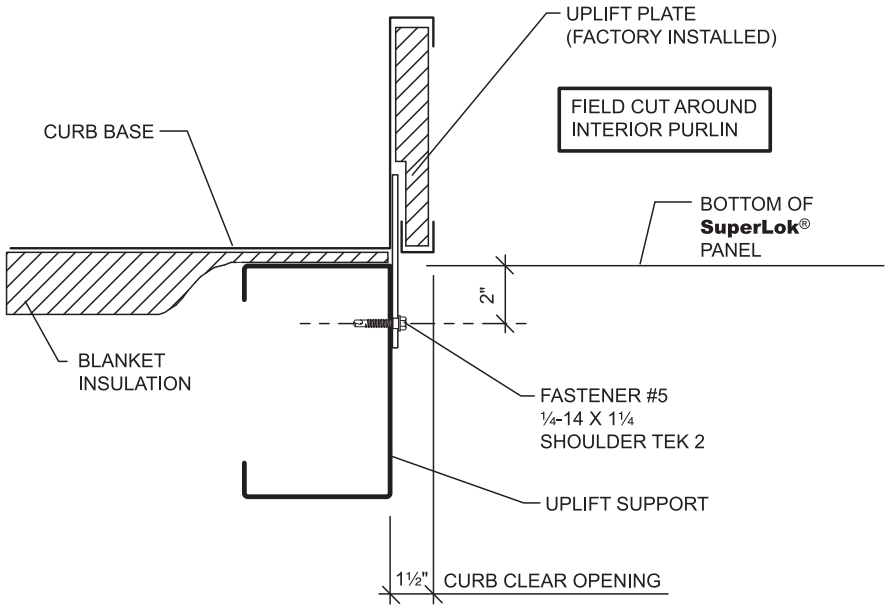

CAUTION

It is the user's responsibility to ensure that openings cut into the roof for installation of roof curbs comply with State, Federal and OSHA regulations and laws, including, but not limited to, guarding roof openings with plywood, fixed standard railings, or other acceptable safety controls that prevent fall-through.

Houston, TX 877-713-6224
Adel, GA 888-446-6224
Atlanta, GA 877-512-6224
Atwater, CA 800-829-9324
Dallas, TX 800-653-6224
Indianapolis, IN 800-735-6224
Jackson, MS 800-622-4136
Lubbock, TX 800-758-6224
Memphis, TN 800-206-6224
Oklahoma City, OK 800-597-6224
Omaha, NE 800-458-6224
Phoenix, AZ 888-533-6224
Richmond, VA 800-729-6224
Rome, NY 800-559-6224
Salt Lake City, UT 800-874-2404
San Antonio, TX 800-598-6224

MBCI®
Metal Roof and Wall Systems

SuperLok® SPECIAL ERECTION TECHNIQUES

CURB INSTALLATION
UPLIFT PLATE FIELD NOTCH

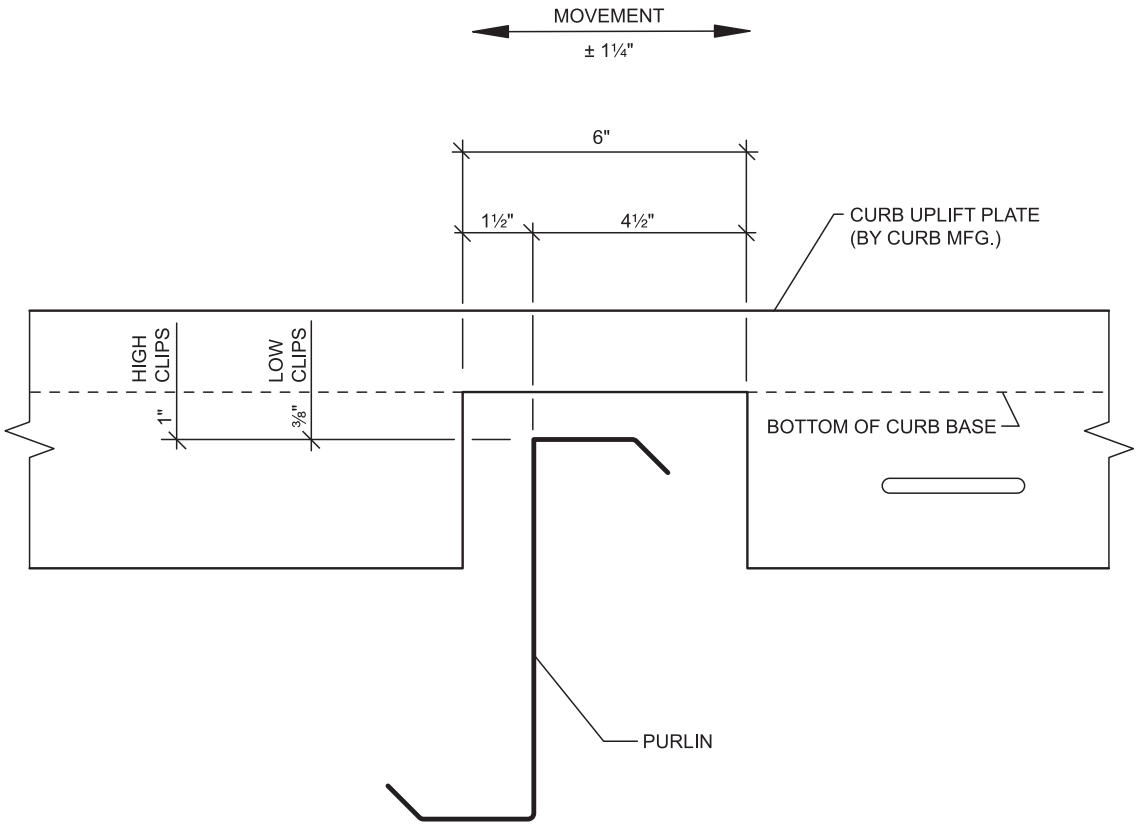

UPLIFT PLATE MUST BE FIELD NOTCHED AROUND THE BUILDING PURLIN TO ALLOW FOR PANEL MOVEMENT.

CAUTION

It is the user's responsibility to ensure that openings cut into the roof for installation of roof curbs comply with State, Federal and OSHA regulations and laws, including, but not limited to, guarding roof openings with plywood, fixed standard railings, or other acceptable safety controls that prevent fall-through.

MBCI®
Metal Roof and Wall Systems

Houston, TX 877-713-6224
Adel, GA 888-446-6224
Atlanta, GA 877-512-6224
Atwater, CA 800-829-9324
Dallas, TX 800-653-6224
Indianapolis, IN 800-735-6224
Jackson, MS 800-622-4136
Lubbock, TX 800-758-6224
Memphis, TN 800-206-6224
Oklahoma City, OK 800-597-6224
Omaha, NE 800-458-6224
Phoenix, AZ 888-533-6224
Richmond, VA 800-729-6224
Rome, NY 800-559-6224
Salt Lake City, UT 800-874-2404
San Antonio, TX 800-598-6224

SPECIAL ERECTION TECHNIQUES — SuperLok®

CURB INSTALLATION
DOWN SLOPE CURB BASE END LAP

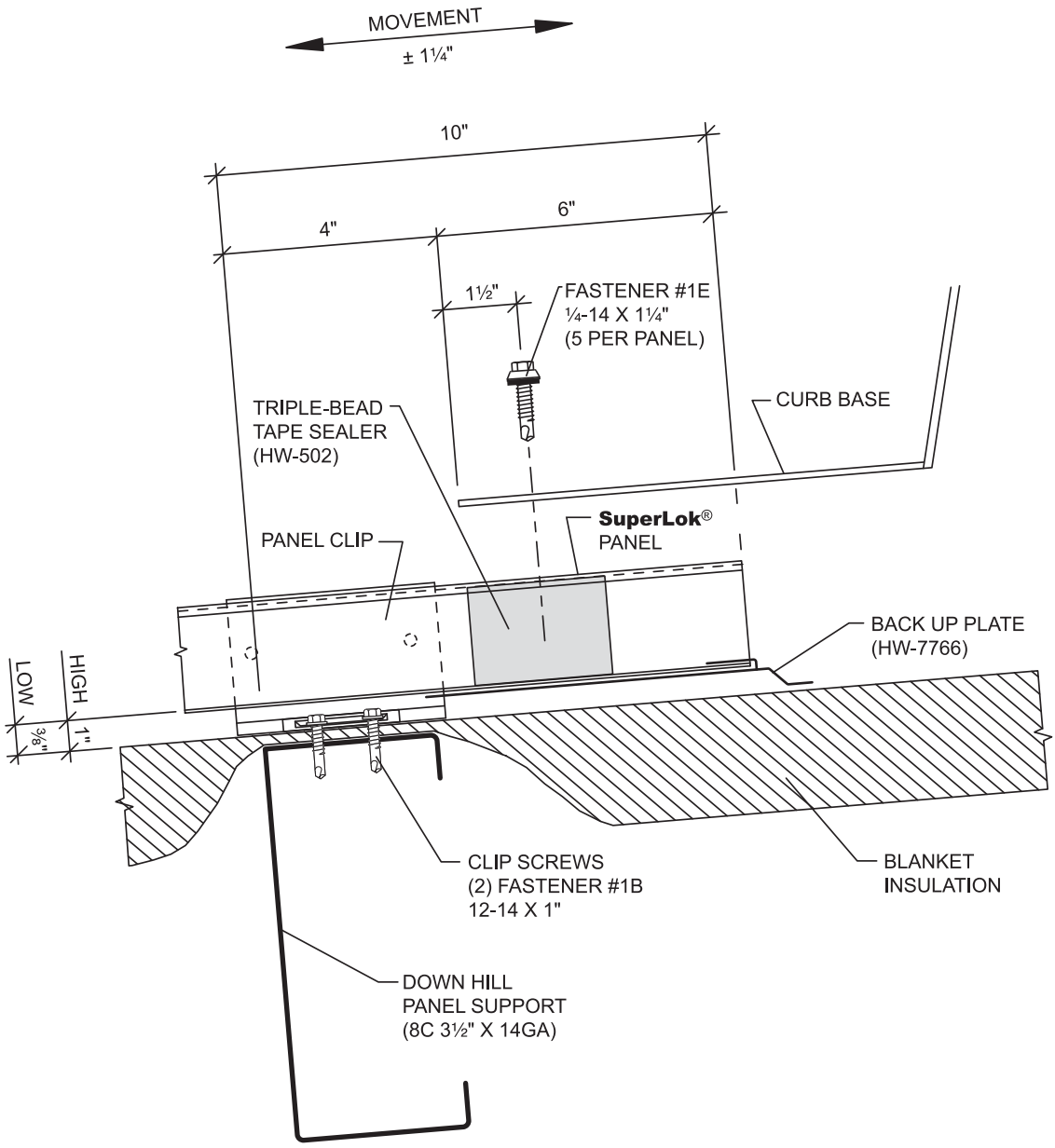

CAUTION

It is the user's responsibility to ensure that openings cut into the roof for installation of roof curbs comply with State, Federal and OSHA regulations and laws, including, but not limited to, guarding roof openings with plywood, fixed standard railings, or other acceptable safety controls that prevent fall-through.

Houston, TX 877-713-6224
Adel, GA 888-446-6224
Atlanta, GA 877-512-6224
Atwater, CA 800-829-9324
Dallas, TX 800-653-6224
Indianapolis, IN 800-735-6224
Jackson, MS 800-622-4136
Lubbock, TX 800-758-6224
Memphis, TN 800-206-6224
Oklahoma City, OK 800-597-6224
Omaha, NE 800-458-6224
Phoenix, AZ 888-533-6224
Richmond, VA 800-729-6224
Rome, NY 800-559-6224
Salt Lake City, UT 800-874-2404
San Antonio, TX 800-598-6224

MBCI®
Metal Roof and Wall Systems

SuperLok® SPECIAL ERECTION TECHNIQUES

CURB INSTALLATION
UP SLOPE CURB BASE END LAP

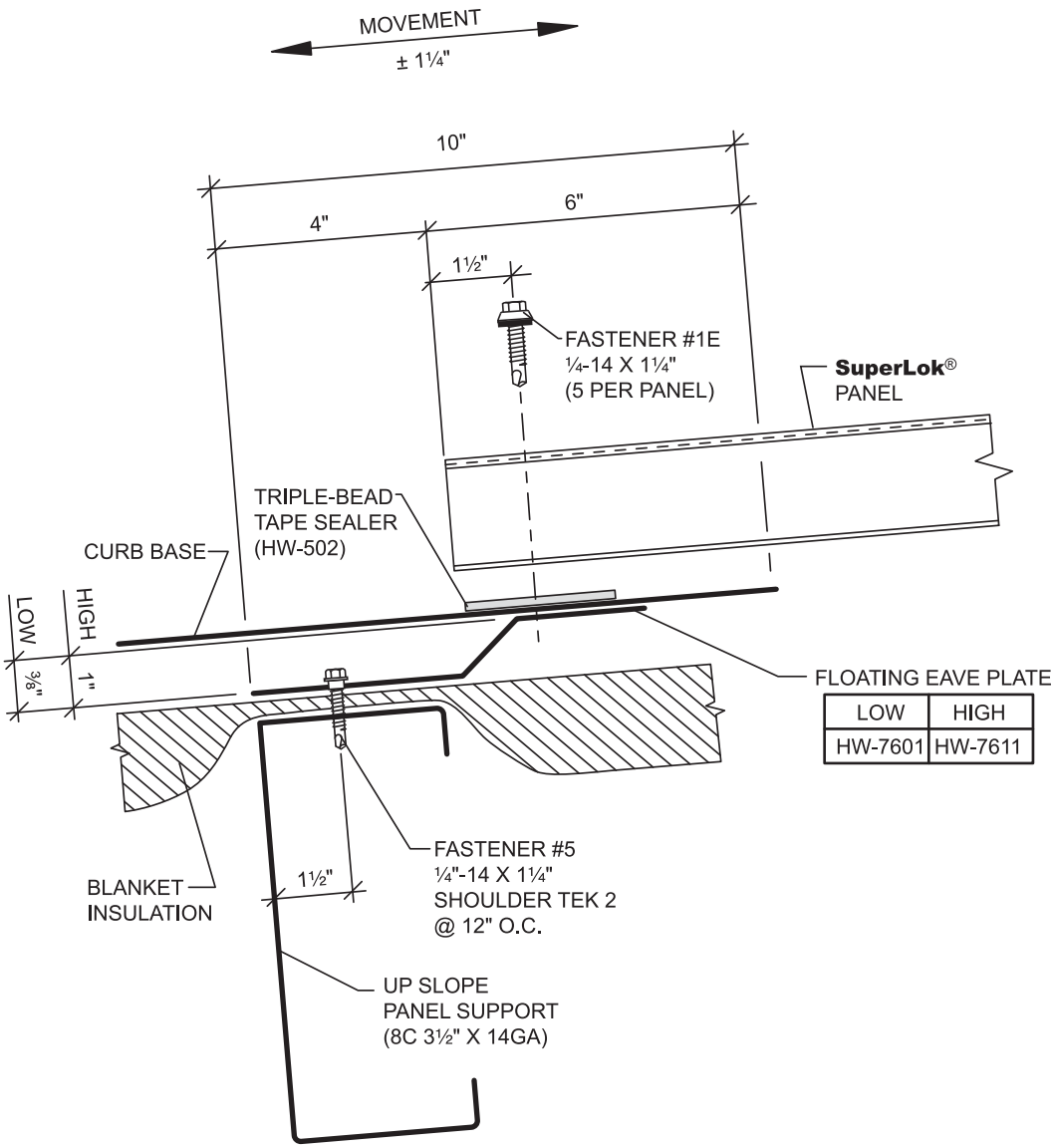

CAUTION

It is the user's responsibility to ensure that openings cut into the roof for installation of roof curbs comply with State, Federal and OSHA regulations and laws, including, but not limited to, guarding roof openings with plywood, fixed standard railings, or other acceptable safety controls that prevent fall-through.

MBCI®
Metal Roof and Wall Systems

Houston, TX 877-713-6224
Adel, GA 888-446-6224
Atlanta, GA 877-512-6224
Atwater, CA 800-829-9324
Dallas, TX 800-653-6224
Indianapolis, IN 800-735-6224
Jackson, MS 800-622-4136
Lubbock, TX 800-758-6224
Memphis, TN 800-206-6224
Oklahoma City, OK 800-597-6224
Omaha, NE 800-458-6224
Phoenix, AZ 888-533-6224
Richmond, VA 800-729-6224
Rome, NY 800-559-6224
Salt Lake City, UT 800-874-2404
San Antonio, TX 800-598-6224

SPECIAL ERECTION TECHNIQUES — SuperLok®

PIPE PENETRATION INSTALLATION
RECOMMENDED SMALL AND LARGE PIPE PENETRATION INSTALLATION

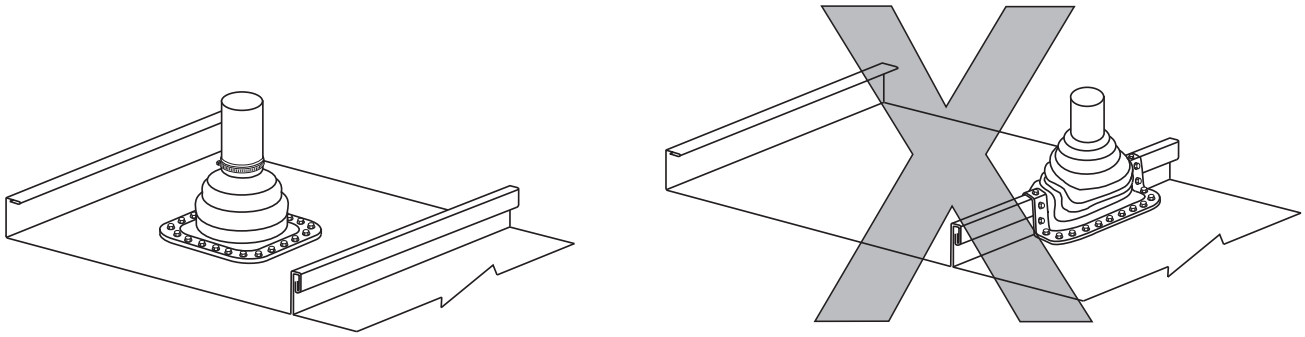

RIGHT WAY **WRONG WAY**

RECOMMENDED SMALL PIPE PENETRATION INSTALLATION

INSTALL PIPE IN CENTER OF PANEL TO ALLOW BASE OF RUBBER ROOF JACK TO LAY FLAT ON PANEL.

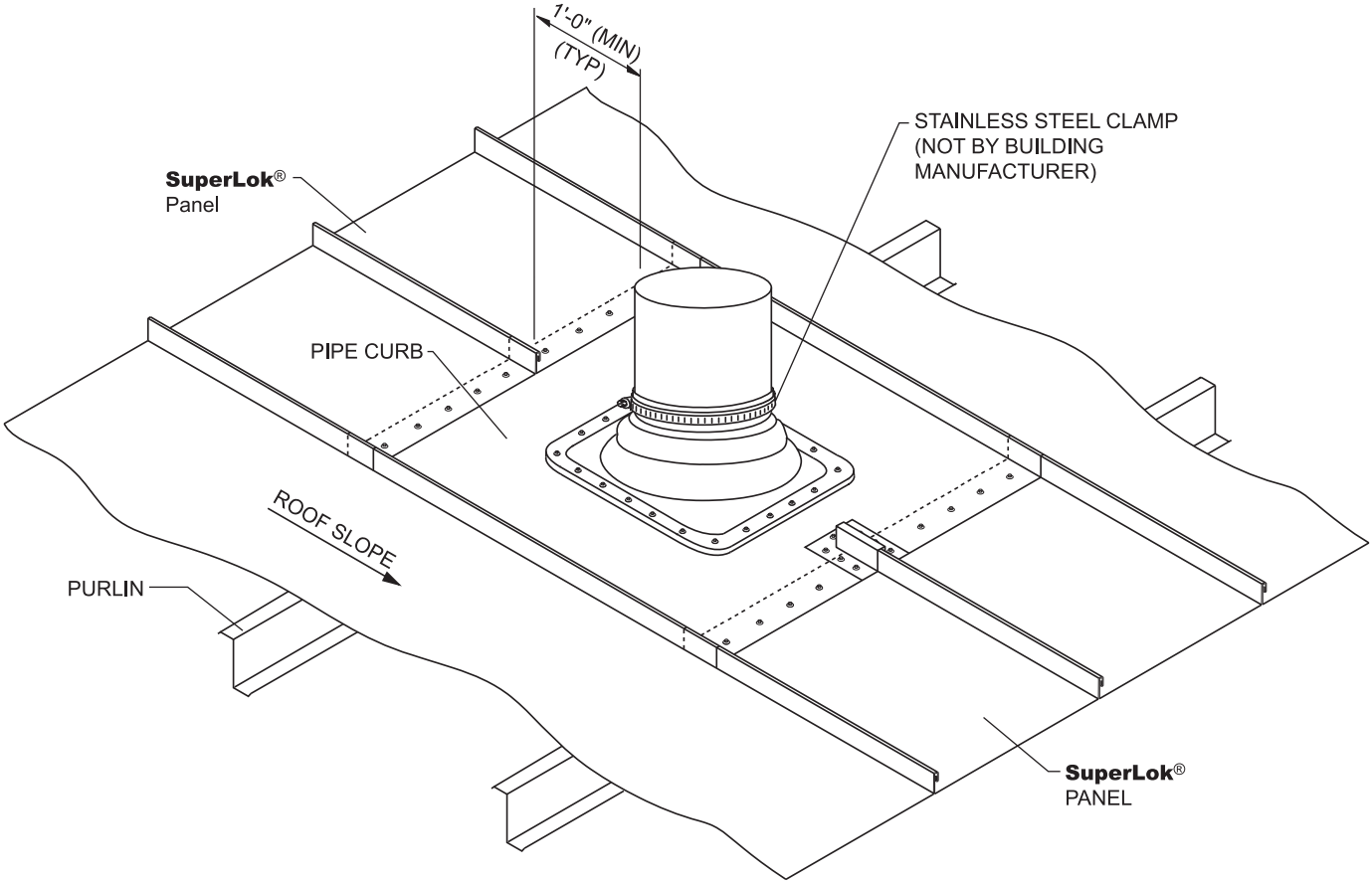

RECOMMENDED LARGE PIPE PENETRATION INSTALLATION

THIS METHOD TO BE USED IN ALL CASES WHERE A PIPE PENETRATION INTERSECTS A PANEL RIB OR WHEN THE PIPE IS TOO LARGE AND WILL NOT ALLOW ADEQUATE WATER FLOW DOWN THE PANEL.

Houston, TX 877-713-6224
Adel, GA 888-446-6224
Atlanta, GA 877-512-6224
Atwater, CA 800-829-9324
Dallas, TX 800-653-6224
Indianapolis, IN 800-735-6224
Jackson, MS 800-622-4136
Lubbock, TX 800-758-6224
Memphis, TN 800-206-6224
Oklahoma City, OK 800-597-6224
Omaha, NE 800-458-6224
Phoenix, AZ 888-533-6224
Richmond, VA 800-729-6224
Rome, NY 800-559-6224
Salt Lake City, UT 800-874-2404
San Antonio, TX 800-598-6224

MBCI®
Metal Roof and Wall Systems

SuperLok® SPECIAL ERECTION TECHNIQUES

PIPE PENETRATION INSTALLATION
DECK-TIGHT INSTALLATION

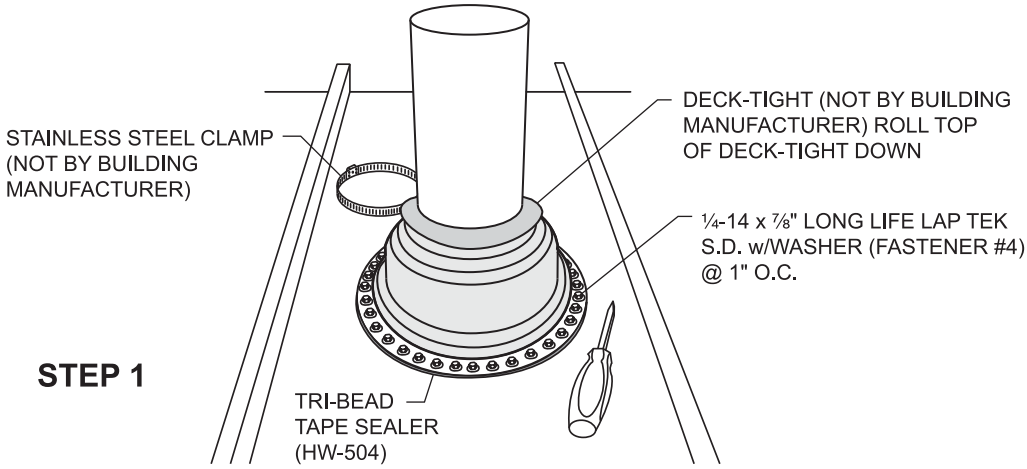

STEP 1

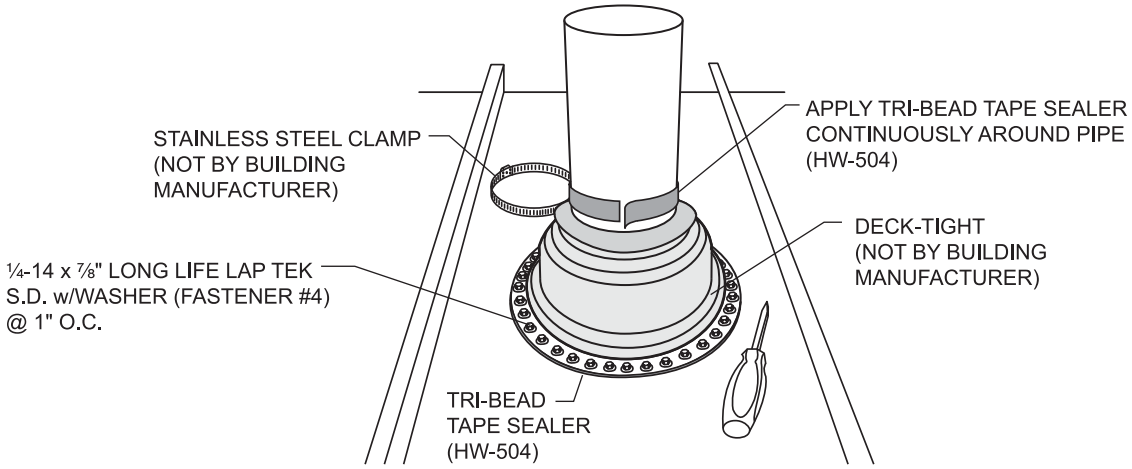

STEP 2

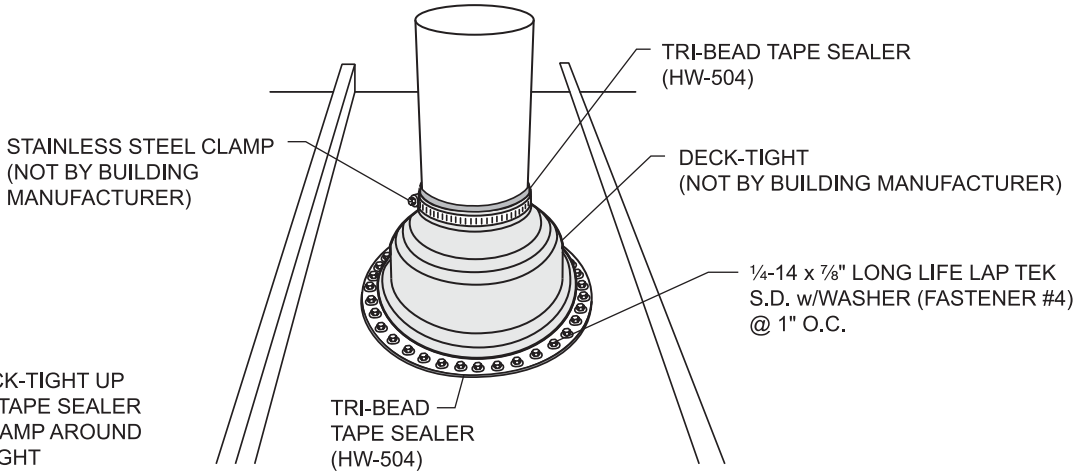

STEP 3

NOTE: ROLL DECK-TIGHT UP OVER TRI-BEAD TAPE SEALER AND SECURE CLAMP AROUND TOP OF DECK-TIGHT

MBCI®
Metal Roof and Wall Systems

Houston, TX 877-713-6224
Adel, GA 888-446-6224
Atlanta, GA 877-512-6224
Atwater, CA 800-829-9324
Dallas, TX 800-653-6224
Indianapolis, IN 800-735-6224
Jackson, MS 800-622-4136
Lubbock, TX 800-758-6224
Memphis, TN 800-206-6224
Oklahoma City, OK 800-597-6224
Omaha, NE 800-458-6224
Phoenix, AZ 888-533-6224
Richmond, VA 800-729-6224
Rome, NY 800-559-6224
Salt Lake City, UT 800-874-2404
San Antonio, TX 800-598-6224

ARCHITECTURAL DETAILS

SuperLok®

OPEN FRAMING
FIXED EAVE WITH GUTTER

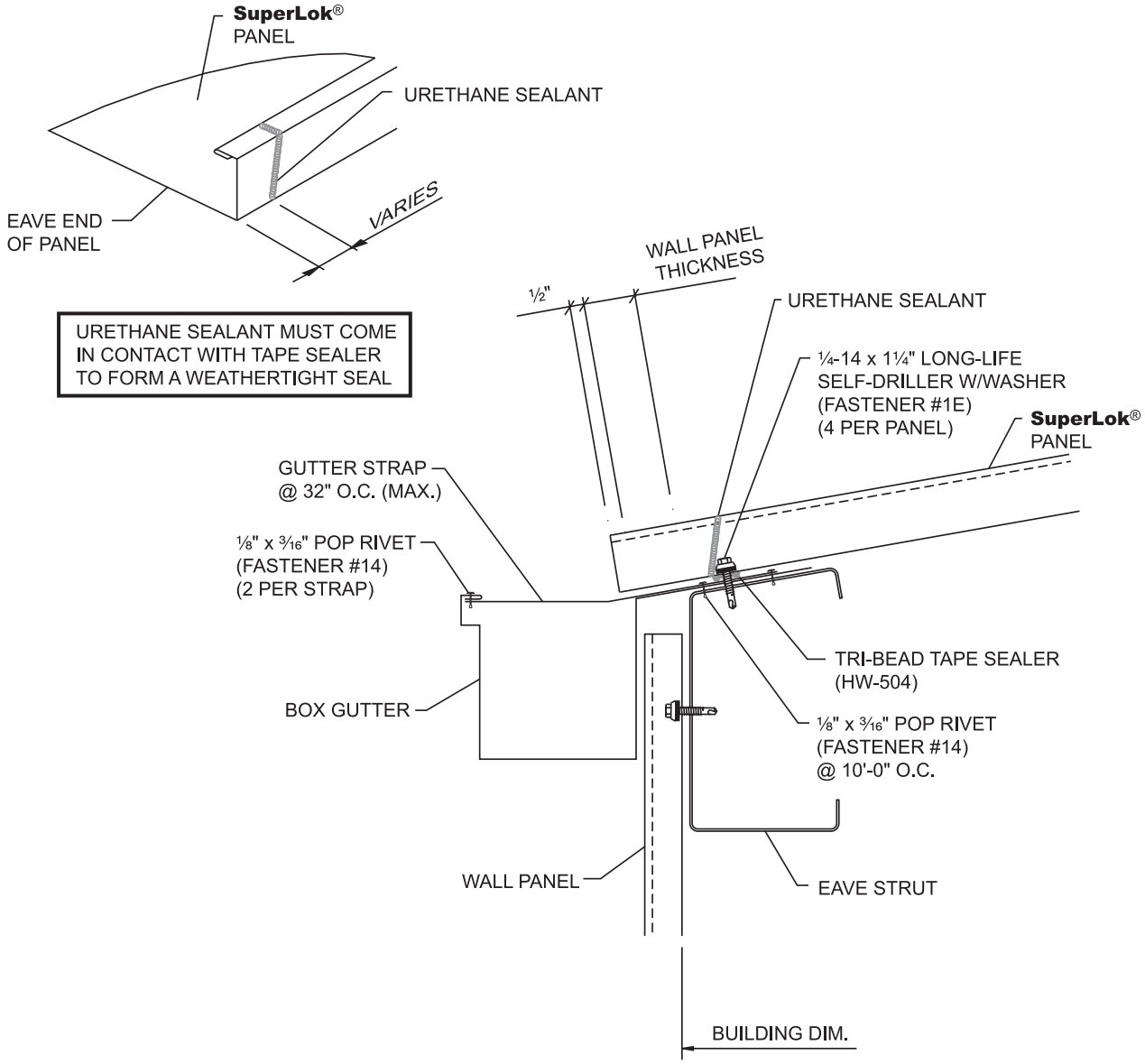

NOTES:

1. **Do not use this detail with the fixed ridge or hip details.**
2. Attach gutter to eave strut at 10'-0" O.C. using Fastener #14.
3. Attach gutter straps to gutter at 32" O.C. using Fastener #14.
4. Apply Tri-Bead tape sealer to slope leg of gutter.
5. Install panel and fasten to eave strut with Fastener #1E. Four fasteners should be used in this location.

Houston, TX 877-713-6224
Adel, GA 888-446-6224
Atlanta, GA 877-512-6224
Atwater, CA 800-829-9324
Dallas, TX 800-653-6224
Indianapolis, IN 800-735-6224
Jackson, MS 800-622-4136
Lubbock, TX 800-758-6224
Memphis, TN 800-206-6224
Oklahoma City, OK 800-597-6224
Omaha, NE 800-458-6224
Phoenix, AZ 888-533-6224
Richmond, VA 800-729-6224
Rome, NY 800-559-6224
Salt Lake City, UT 800-874-2404
San Antonio, TX 800-598-6224

MBCI®
Metal Roof and Wall Systems

SuperLok® ARCHITECTURAL DETAILS

OPEN FRAMING
FIXED EAVE WITH SNOW GUTTER

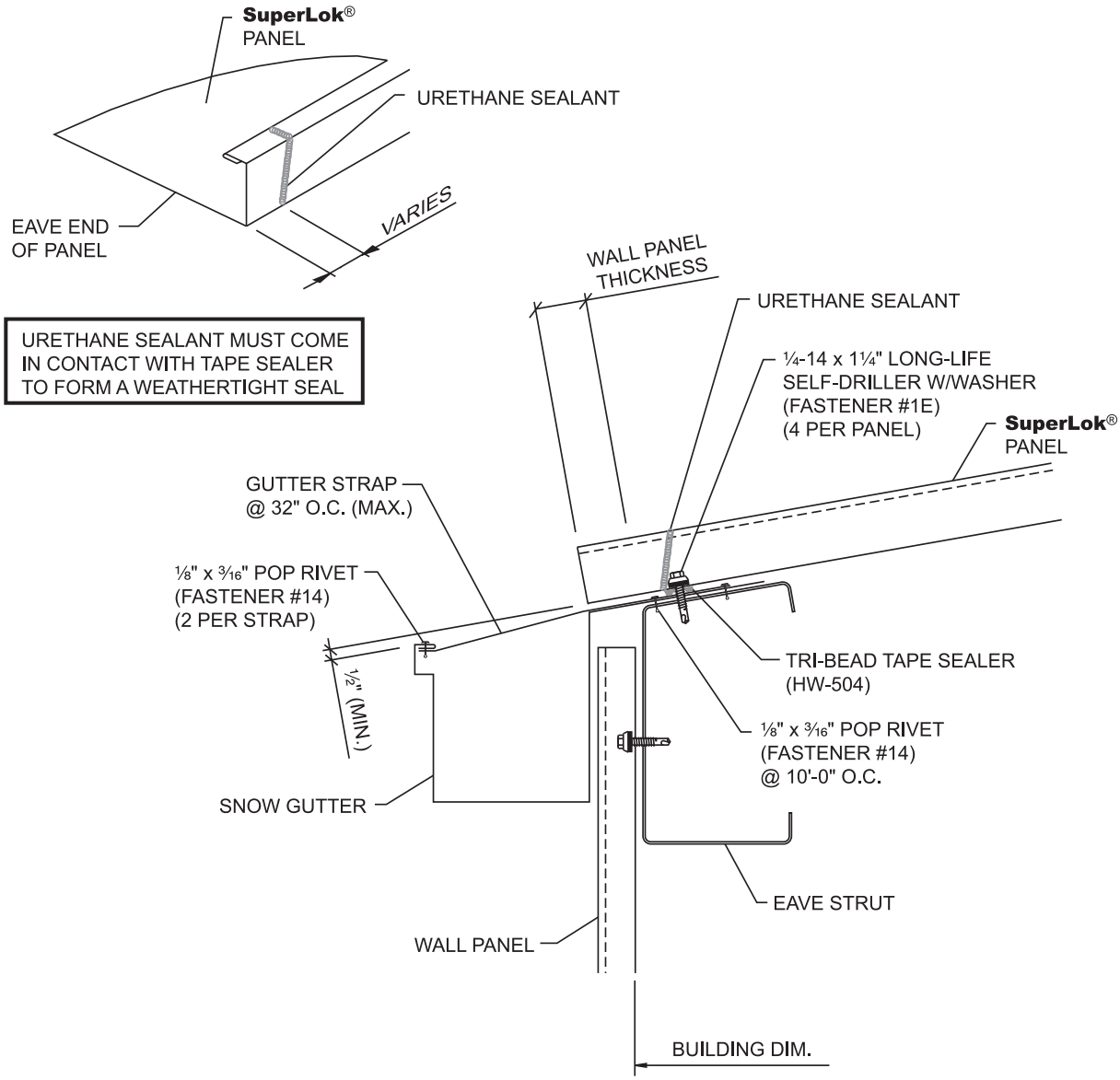

NOTES:

1. **Do not use this detail with the fixed ridge or hip details.**
2. Attach gutter to eave strut at 10'-0" O.C. using Fastener #14.
3. Attach gutter straps to gutter at 32" O.C. using Fastener #14.
4. Apply Tri-Bead tape sealer to slope leg of gutter.
5. Install panel and fasten to eave strut with Fastener #1E. Four fasteners should be used in this location.

MBCI®
Metal Roof and Wall Systems

Houston, TX 877-713-6224
Adel, GA 888-446-6224
Atlanta, GA 877-512-6224
Atwater, CA 800-829-9324
Dallas, TX 800-653-6224
Indianapolis, IN 800-735-6224
Jackson, MS 800-622-4136
Lubbock, TX 800-758-6224
Memphis, TN 800-206-6224
Oklahoma City, OK 800-597-6224
Omaha, NE 800-458-6224
Phoenix, AZ 888-533-6224
Richmond, VA 800-729-6224
Rome, NY 800-559-6224
Salt Lake City, UT 800-874-2404
San Antonio, TX 800-598-6224

ARCHITECTURAL DETAILS

SuperLok®

OPEN FRAMING
FIXED EAVE WITH EAVE TRIM

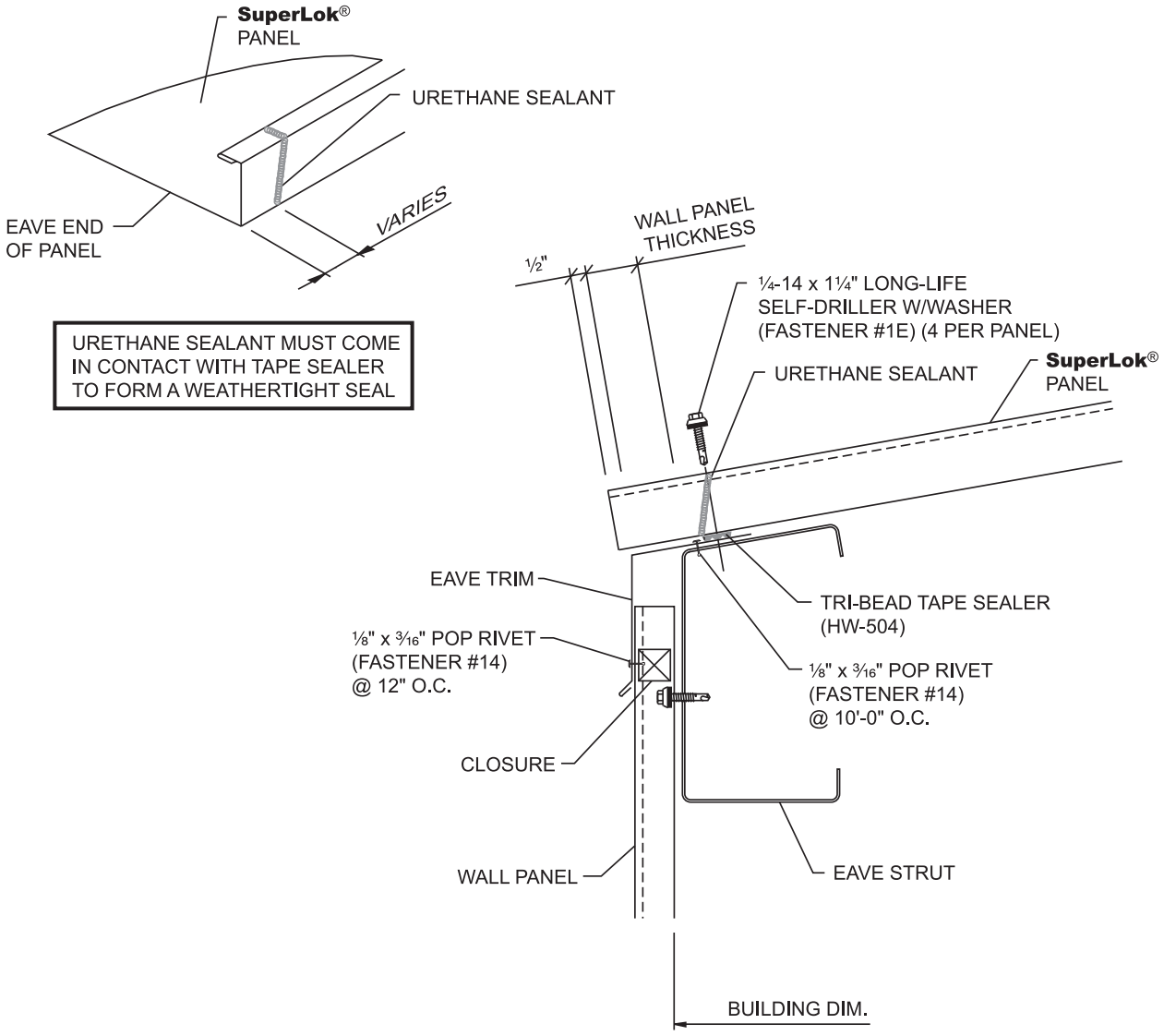

NOTES:

1. **Do not use this detail with the fixed ridge or hip details.**
2. Attach eave trim to eave strut at 10'-0" O.C. using Fastener #14.
3. Apply Tri-Bead tape sealer to slope leg of eave trim.
4. Install panel and fasten to eave strut with Fastener #1E. Four fasteners should be used in this location.

Houston, TX 877-713-6224
Adel, GA 888-446-6224
Atlanta, GA 877-512-6224
Atwater, CA 800-829-9324
Dallas, TX 800-653-6224
Indianapolis, IN 800-735-6224
Jackson, MS 800-622-4136
Lubbock, TX 800-758-6224
Memphis, TN 800-206-6224
Oklahoma City, OK 800-597-6224
Omaha, NE 800-458-6224
Phoenix, AZ 888-533-6224
Richmond, VA 800-729-6224
Rome, NY 800-559-6224
Salt Lake City, UT 800-874-2404
San Antonio, TX 800-598-6224

MBCI®
Metal Roof and Wall Systems

SuperLok® ARCHITECTURAL DETAILS

OPEN FRAMING
FLOATING RIDGE

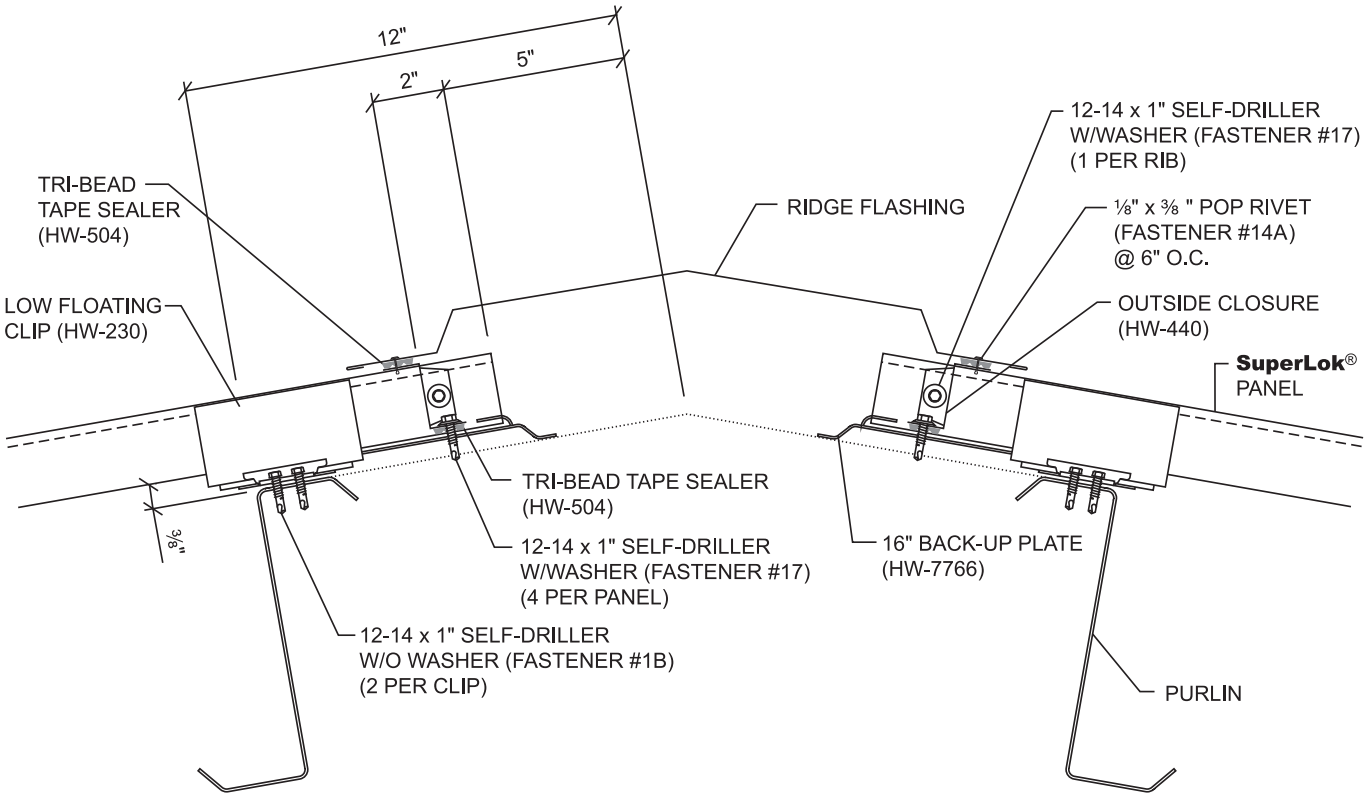

NOTES:

1. **Do not use this detail with hemmed panel method of attachment at the eave or valley.**
2. Install back-up plate onto end of panel.
3. Install outside closures as shown on page SL-37.
4. Install Tri-Bead tape sealer to top leg of outside closure.
5. Attach ridge flash to outside closure with Fastener #14A at 6" O.C.

MBCI®
Metal Roof and Wall Systems

Houston, TX 877-713-6224
Adel, GA 888-446-6224
Atlanta, GA 877-512-6224
Atwater, CA 800-829-9324
Dallas, TX 800-653-6224
Indianapolis, IN 800-735-6224
Jackson, MS 800-622-4136
Lubbock, TX 800-758-6224
Memphis, TN 800-206-6224
Oklahoma City, OK 800-597-6224
Omaha, NE 800-458-6224
Phoenix, AZ 888-533-6224
Richmond, VA 800-729-6224
Rome, NY 800-559-6224
Salt Lake City, UT 800-874-2404
San Antonio, TX 800-598-6224

ARCHITECTURAL DETAILS

SuperLok®

OPEN FRAMING
FLOATING VENTED RIDGE

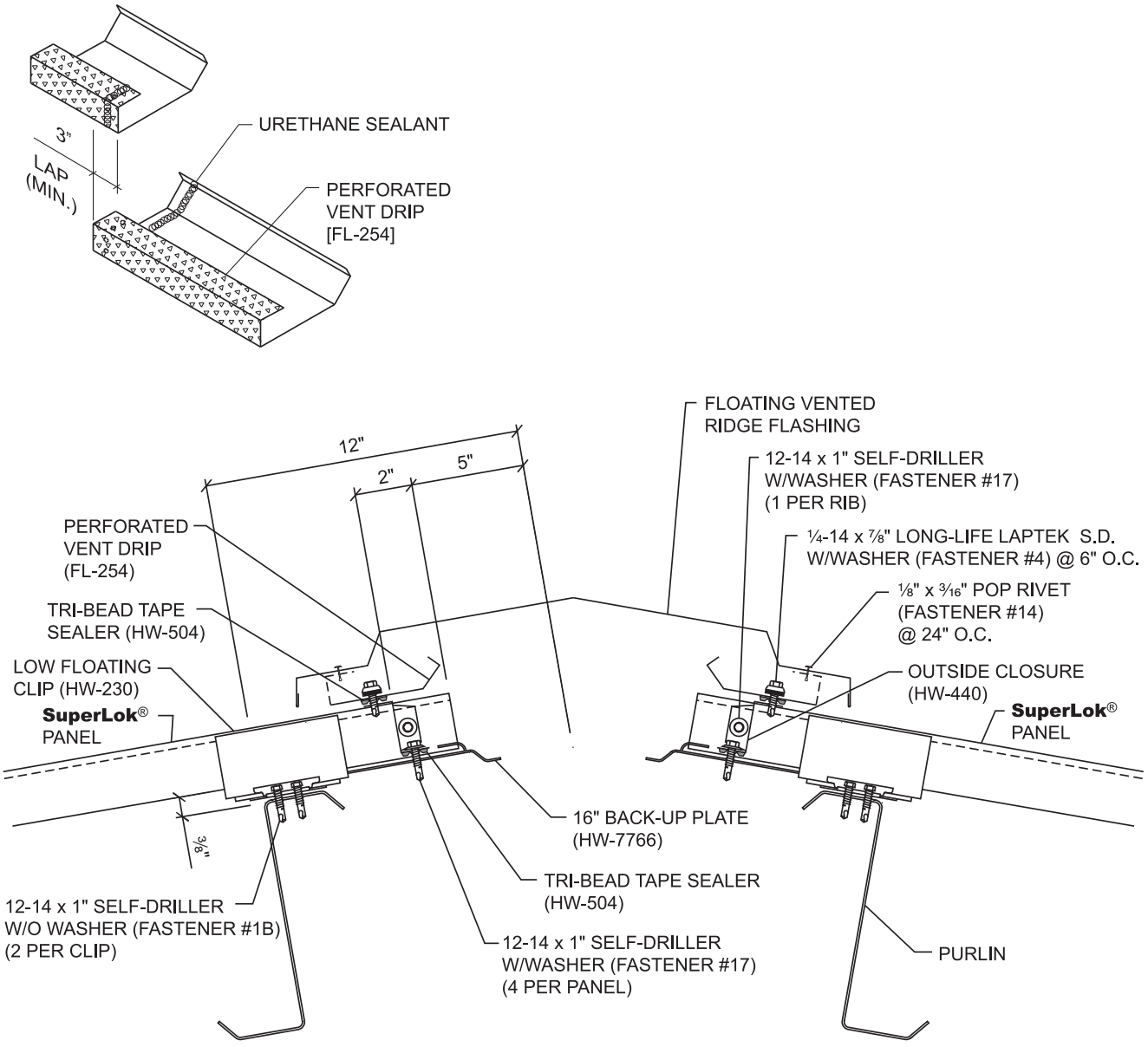

NOTES:

1. **Do not use this detail with the hemmed panel method of attachment at the eave or valley.**
2. Vented ridge detail should be used in conjunction with soffit and/or eave vents to provide proper circulation and to prevent weather infiltration during high winds.
3. Install back-up plate and outside closure.
4. Attach perforated vent drip to outside closure with Fastener #4. Seal laps in vent drip with urethane sealant.
5. Attach ridge flash to vent drip with Fastener #14 at 24" O.C.

Houston, TX 877-713-6224
Adel, GA 888-446-6224
Atlanta, GA 877-512-6224
Atwater, CA 800-829-9324
Dallas, TX 800-653-6224
Indianapolis, IN 800-735-6224
Jackson, MS 800-622-4136
Lubbock, TX 800-758-6224
Memphis, TN 800-206-6224
Oklahoma City, OK 800-597-6224
Omaha, NE 800-458-6224
Phoenix, AZ 888-533-6224
Richmond, VA 800-729-6224
Rome, NY 800-559-6224
Salt Lake City, UT 800-874-2404
San Antonio, TX 800-598-6224

MBCI®
Metal Roof and Wall Systems

SuperLok® ARCHITECTURAL DETAILS

OPEN FRAMING
FIXED VENTED EAVE

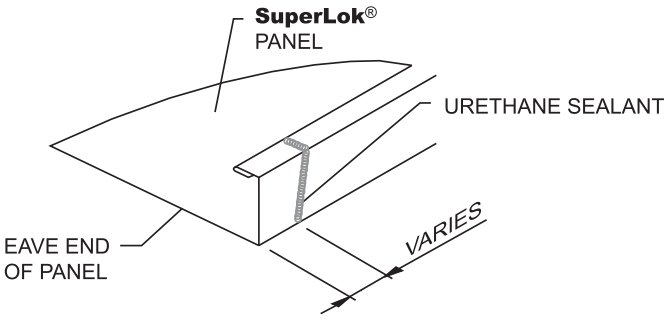

URETHANE SEALANT MUST COME IN CONTACT WITH TAPE SEALER TO FORM A WEATHERTIGHT SEAL

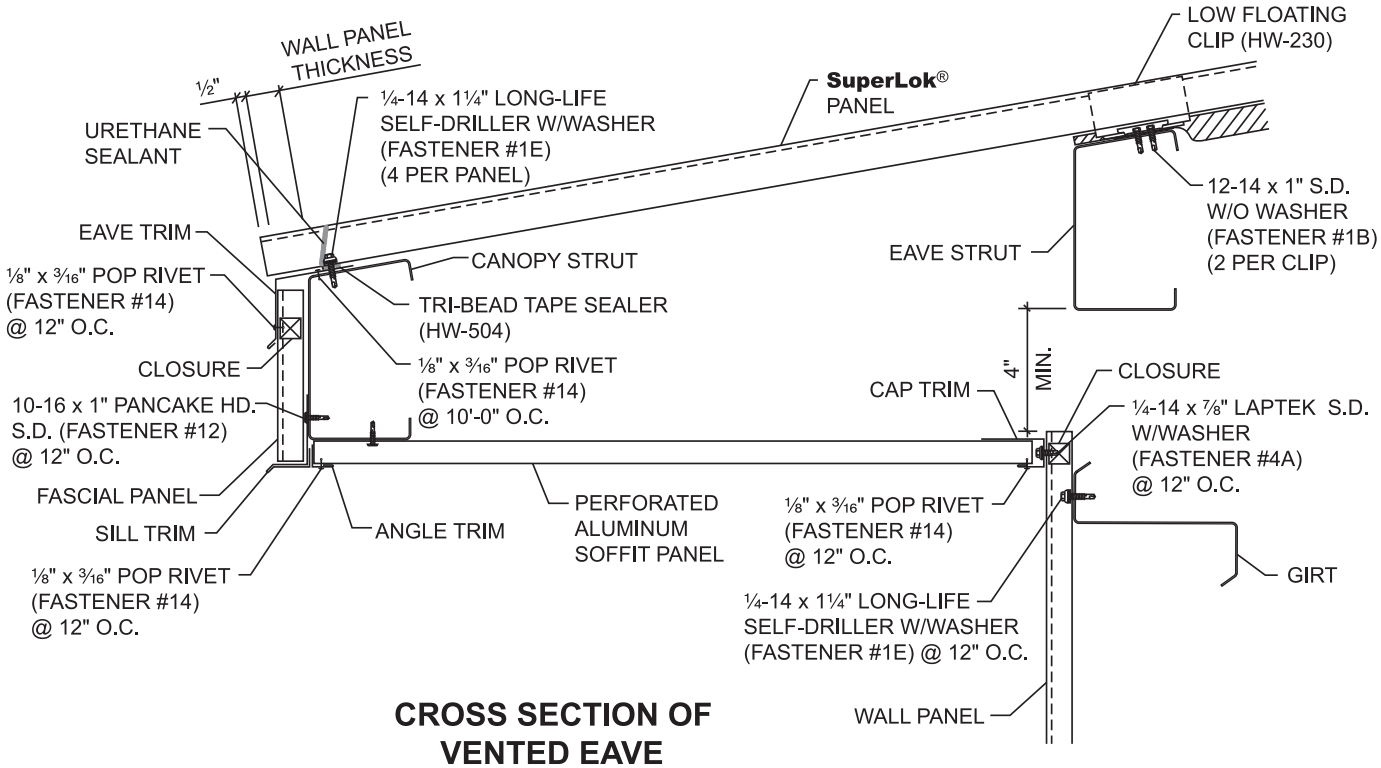

CROSS SECTION OF VENTED EAVE (OVERHANG MAXIMUM 2'-0")

NOTES:

1. **This detail does not provide the diaphragm action normally obtained with through fastened roof panels. Consult a professional engineer for other bracing options.**
2. A minimum of 4" between top of wall panel and bottom of eave strut is required to allow proper ventilation at eave.
3. Ridge or gable vents are required for the vented eave to preform properly.
4. Ventilation requirements vary by project. Consult a mechanical engineer for you specific project requirements.

MBCI®
Metal Roof and Wall Systems

Houston, TX 877-713-6224
Adel, GA 888-446-6224
Atlanta, GA 877-512-6224
Atwater, CA 800-829-9324
Dallas, TX 800-653-6224
Indianapolis, IN 800-735-6224
Jackson, MS 800-622-4136
Lubbock, TX 800-758-6224
Memphis, TN 800-206-6224
Oklahoma City, OK 800-597-6224
Omaha, NE 800-458-6224
Phoenix, AZ 888-533-6224
Richmond, VA 800-729-6224
Rome, NY 800-559-6224
Salt Lake City, UT 800-874-2404
San Antonio, TX 800-598-6224

ARCHITECTURAL DETAILS

SuperLok®

OPEN FRAMING
RAKE

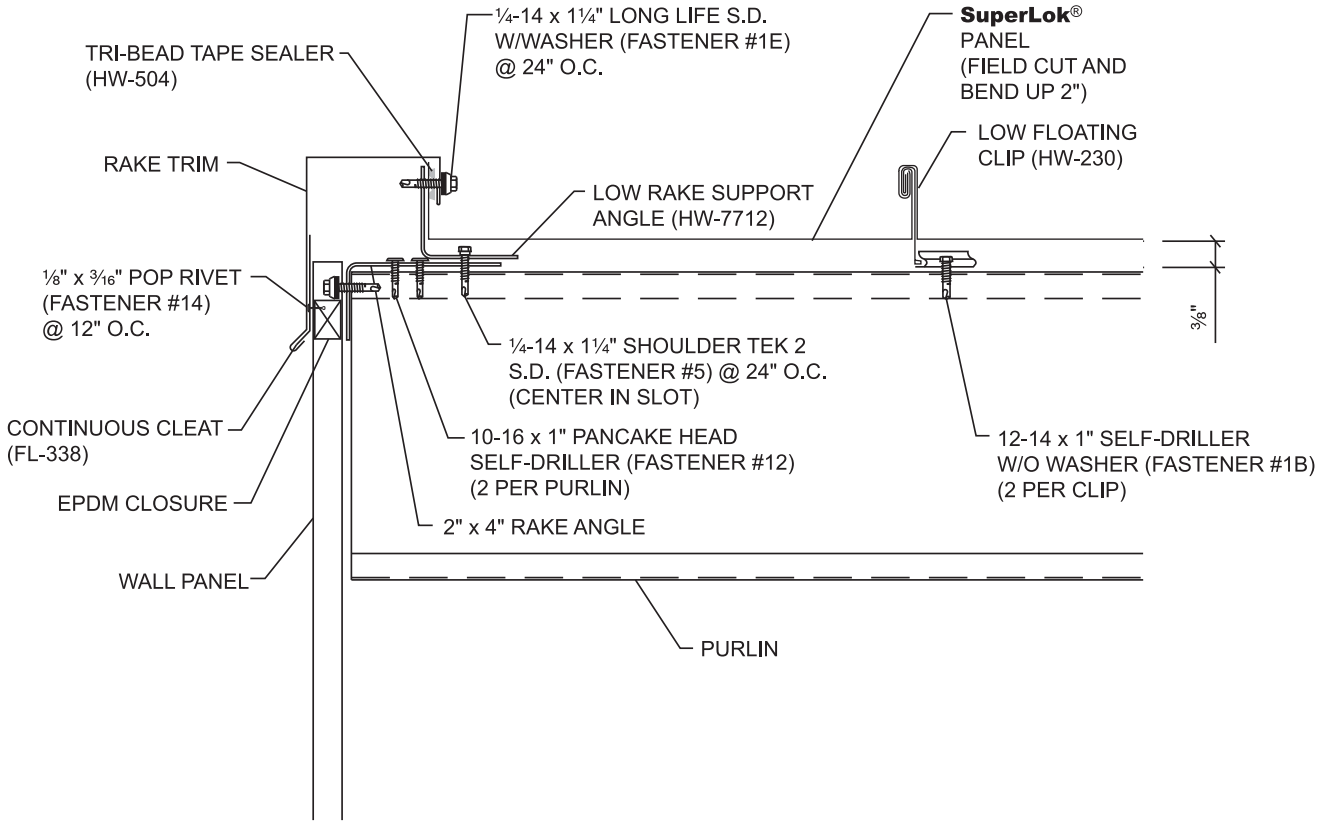

NOTES:

1. Install rake support with Fastener #5 at 2'-0" O.C.
2. Engage female leg of panel over rake support.
3. Apply Tri-Bead tape sealer to vertical leg of panel.
4. Attach continuous cleat to wall panels with Fastener #14 at each high rib.
5. Install rake trim with Fastener #1E at 2'-0" O.C. **Fastener must go through rake support.**
6. If roof finishes on module, finishing detail will be similar to starting detail except, field cut top of panel rib so only the vertical leg of the panel remains. If roof finishes off module, field cut and bend last panel to fit against rake support.

Houston, TX 877-713-6224
Adel, GA 888-446-6224
Atlanta, GA 877-512-6224
Atwater, CA 800-829-9324
Dallas, TX 800-653-6224
Indianapolis, IN 800-735-6224
Jackson, MS 800-622-4136
Lubbock, TX 800-758-6224
Memphis, TN 800-206-6224
Oklahoma City, OK 800-597-6224
Omaha, NE 800-458-6224
Phoenix, AZ 888-533-6224
Richmond, VA 800-729-6224
Rome, NY 800-559-6224
Salt Lake City, UT 800-874-2404
San Antonio, TX 800-598-6224

MBCI®
Metal Roof and Wall Systems

SuperLok® ARCHITECTURAL DETAILS

OPEN FRAMING
PARAPET RAKE

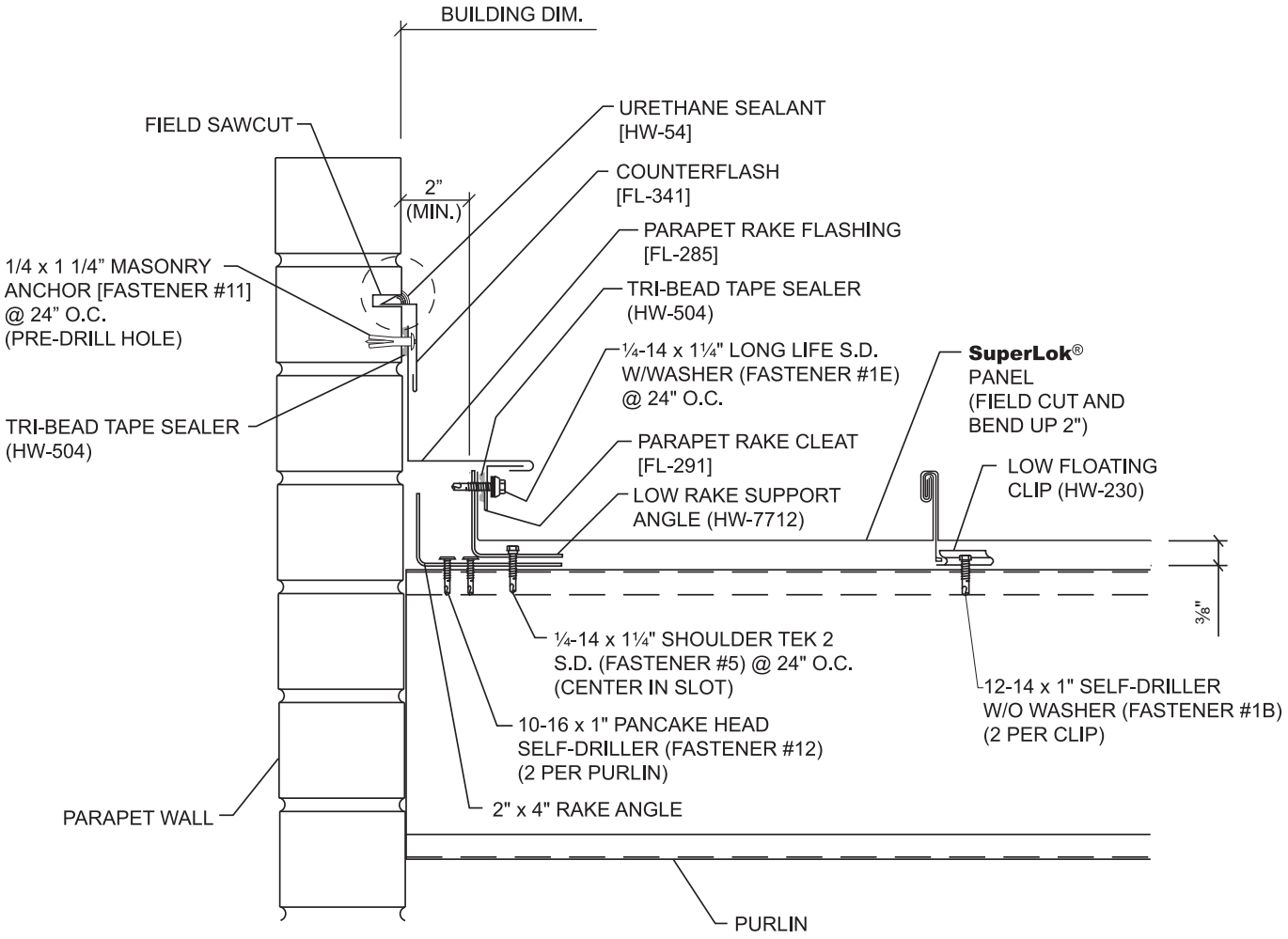

NOTES:

1. Install rake support with Fastener #5 at 2'-0" o.c.
2. Engage female leg of panel over rake support.
3. Apply Tri-Bead tape sealer to vertical leg of panel. Install parapet rake cleat to panel leg with Fastener #1E at 2'-0" o.c.
   Fasteners must go through rake support.
4. Install parapet rake flash by engaging open hem over parapet rake cleat. Tie vertical leg of parapet rake flash to parapet wall with Fastener #11.
5. If roof finishes on module, finishing detail will be similar to starting detail except, field cut top of panel rib so only the vertical leg of the panel remains. If roof finishes off module, field cut and bend last panel run to fit against rake support. Install tape sealer, parapet rake cleat, and parapet rake flash as previously described.
6. If parapet rake flash is not to be immediately installed, temporarily fasten panels to rake support to prevent wind damage.

Metal Roof and Wall Systems

Houston, TX 877-713-6224
Adel, GA 888-446-6224
Atlanta, GA 877-512-6224
Atwater, CA 800-829-9324
Dallas, TX 800-653-6224
Indianapolis, IN 800-735-6224
Jackson, MS 800-622-4136
Lubbock, TX 800-758-6224
Memphis, TN 800-206-6224
Oklahoma City, OK 800-597-6224
Omaha, NE 800-458-6224
Phoenix, AZ 888-533-6224
Richmond, VA 800-729-6224
Rome, NY 800-559-6224
Salt Lake City, UT 800-874-2404
San Antonio, TX 800-598-6224

ARCHITECTURAL DETAILS

SuperLok®

OPEN FRAMING
FLOATING HIGH SIDE EAVE

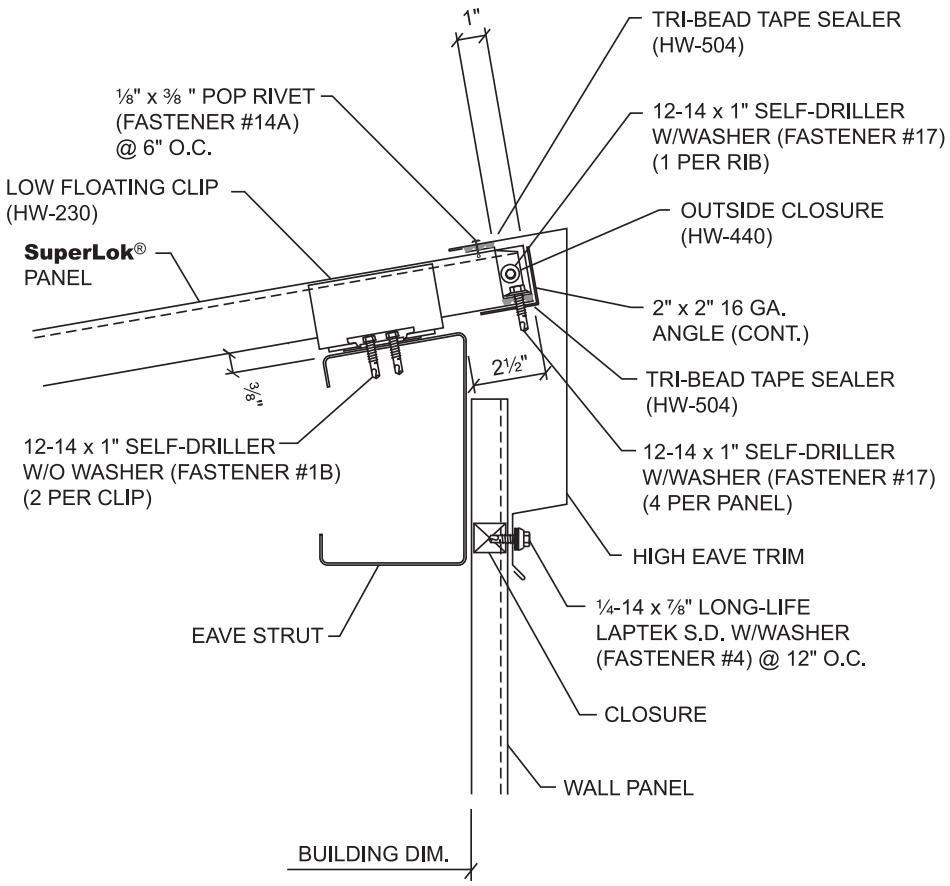

NOTES:

1. **Do not use this detail with the hemmed panel method of attachment at the eave or valley.**
2. Install outside closures as shown on page SL-37 with following exceptions:
   A. Align edge of tape sealer with end panel.
   B. Vertical Leg of outside closure is 1" from end of panel.
   C. Attach outside closure to 2" x 2" angle with Fastener #17.
3. Install Tri-Bead tape sealer to top leg of outside closure.
4. Attach high side eave trim to outside closure with Fastener #14A at 6" O.C.
5. Attach high side eave trim to wall panels with Fastener #4 at each high rib.

Houston, TX 877-713-6224
Adel, GA 888-446-6224
Atlanta, GA 877-512-6224
Atwater, CA 800-829-9324
Dallas, TX 800-653-6224
Indianapolis, IN 800-735-6224
Jackson, MS 800-622-4136
Lubbock, TX 800-758-6224
Memphis, TN 800-206-6224
Oklahoma City, OK 800-597-6224
Omaha, NE 800-458-6224
Phoenix, AZ 888-533-6224
Richmond, VA 800-729-6224
Rome, NY 800-559-6224
Salt Lake City, UT 800-874-2404
San Antonio, TX 800-598-6224

MBCI®
Metal Roof and Wall Systems

SuperLok® ARCHITECTURAL DETAILS

OPEN FRAMING
PARAPET FLOATING HIGH SIDE EAVE

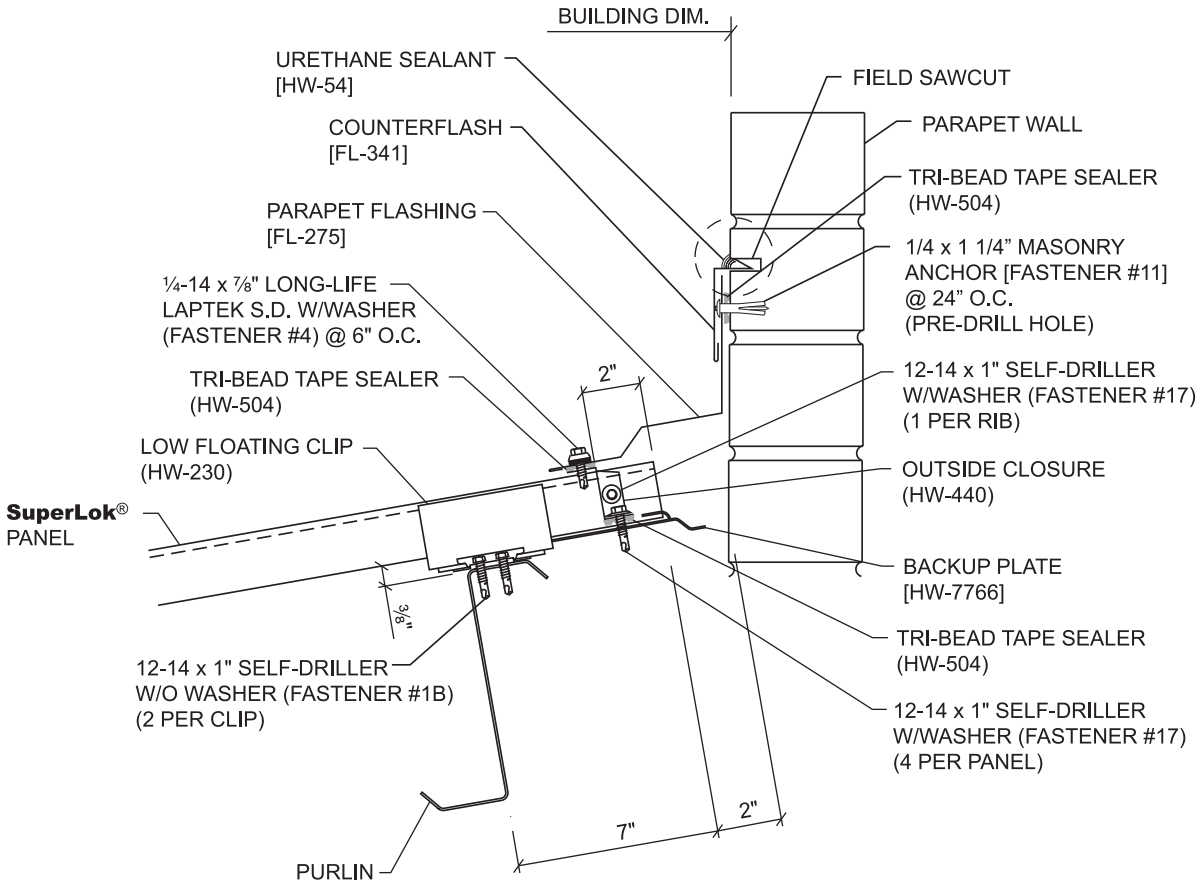

NOTES:

1. **Do not use this detail with the hemmed panel method of attachment at the eave or valley.**
2. Install back-up plate onto end of panel.
3. Install outside closures as shown on page SL-37.
4. Install Tri-Bead tape sealer to top leg of outside closure.
5. Attach parapet high side eave flash to outside closure with Fastener #4 at 6" o.c. tie vertical leg of parapet high side eave flash to parapet wall with Fastener #11.

MBCI®
Metal Roof and Wall Systems

Houston, TX 877-713-6224
Adel, GA 888-446-6224
Atlanta, GA 877-512-6224
Atwater, CA 800-829-9324
Dallas, TX 800-653-6224
Indianapolis, IN 800-735-6224
Jackson, MS 800-622-4136
Lubbock, TX 800-758-6224
Memphis, TN 800-206-6224
Oklahoma City, OK 800-597-6224
Omaha, NE 800-458-6224
Phoenix, AZ 888-533-6224
Richmond, VA 800-729-6224
Rome, NY 800-559-6224
Salt Lake City, UT 800-874-2404
San Antonio, TX 800-598-6224

ARCHITECTURAL DETAILS

SuperLok®

OPEN FRAMING
FIXED VALLEY

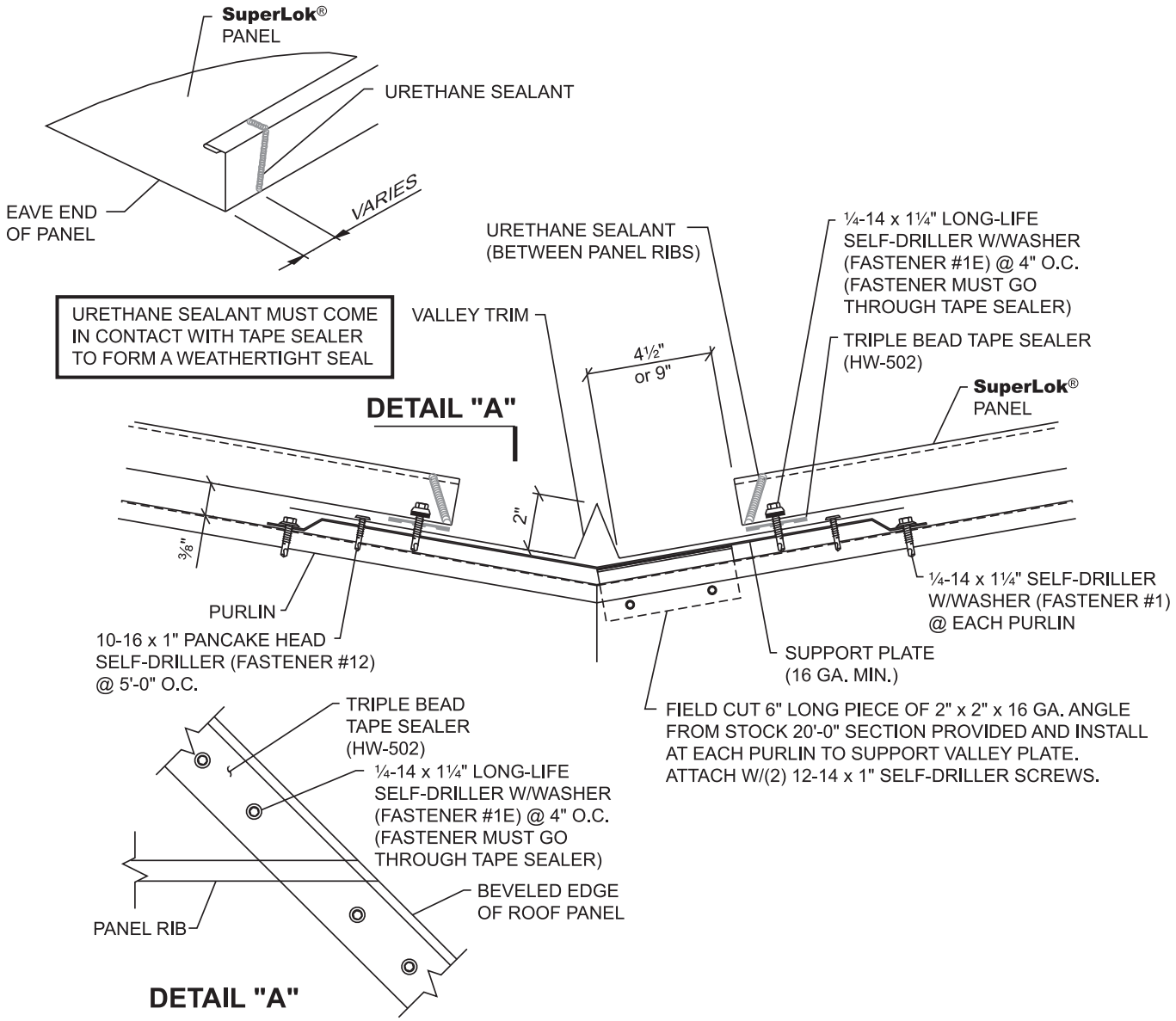

NOTES:

1. For valleys over 30', use extended valley trim.
2. Install 16 gauge valley plate to top of purlins. Attach valley trim to valley plate with Fastener #12 to hold in place until panels are installed.
3. Bevel cut panels to match slope of valley.
4. Mark panel line location on valley trim and install Triple Bead tape sealer ½" back from this mark.
5. Use Fastener #1E at valley 4" O.C. Faster must go through tape sealer.
6. To prevent condensation, valley plate should be insulated.
7. On High Systems, overhang the panels ½" downslope from the 1" vertical leg of the valley trim to keep water off of upper leg of valley trim.

Houston, TX 877-713-6224
Adel, GA 888-446-6224
Atlanta, GA 877-512-6224
Atwater, CA 800-829-9324
Dallas, TX 800-653-6224
Indianapolis, IN 800-735-6224
Jackson, MS 800-622-4136
Lubbock, TX 800-758-6224
Memphis, TN 800-206-6224
Oklahoma City, OK 800-597-6224
Omaha, NE 800-458-6224
Phoenix, AZ 888-533-6224
Richmond, VA 800-729-6224
Rome, NY 800-559-6224
Salt Lake City, UT 800-874-2404
San Antonio, TX 800-598-6224

MBCI®
Metal Roof and Wall Systems

SuperLok® ARCHITECTURAL DETAILS

OPEN FRAMING
FLOATING HIP

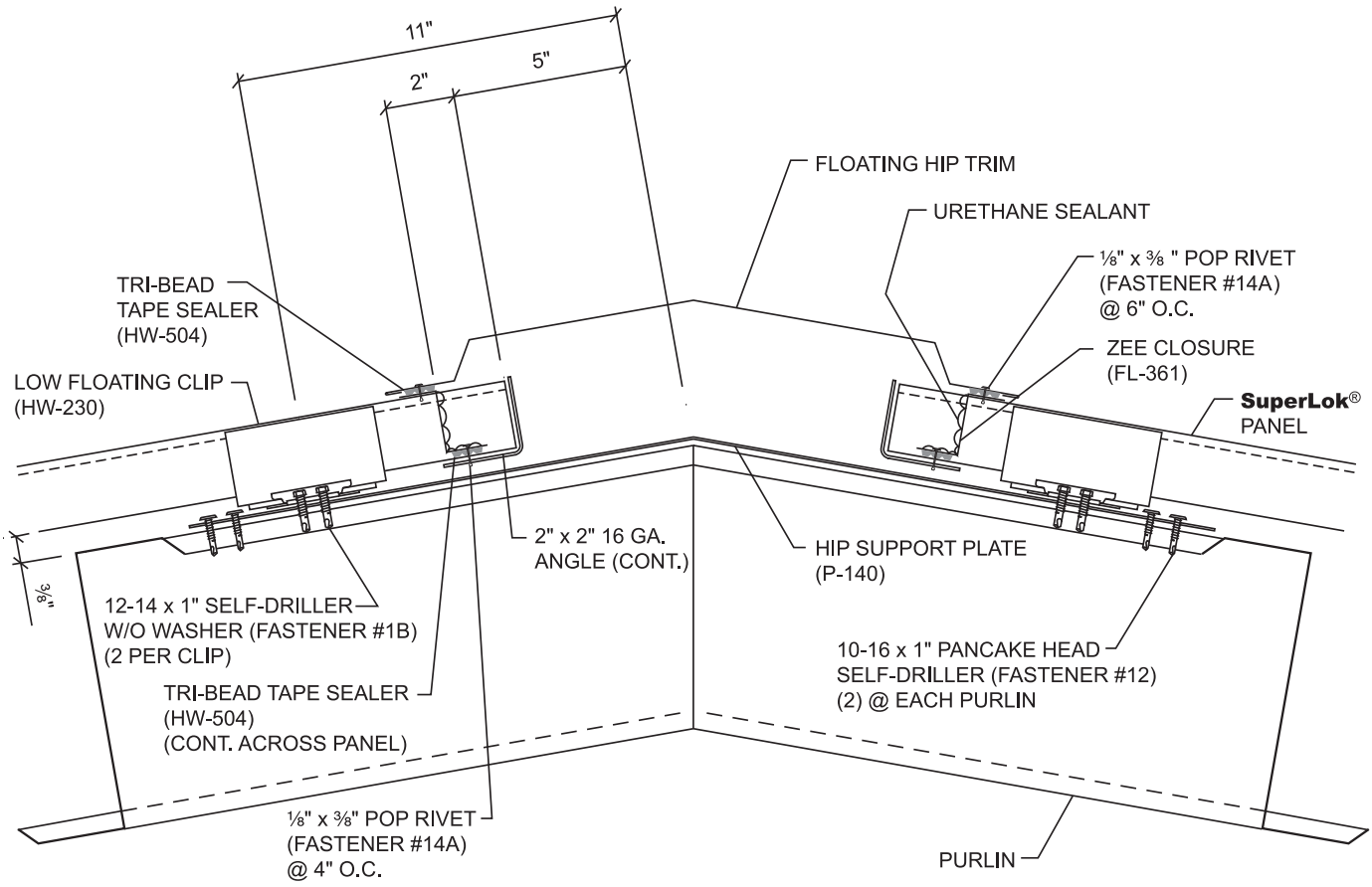

NOTES:

1. Hip must have a support plate to receive the clips.
2. Bevel cut and install panels to follow slope of hip.
3. Install Tri-Bead tape sealer to pans of panels, running parallel to the hip.
4. Slide a length of 2" x 2" x 16 gauge angle under pan of panels. The 2" x 2" angle reinforces the panel. **Do not fasten 2" x 2" angle to hip support plate. This will restrain the panels from floating.**
5. Bevel cut and install "Z" closures to panels and 2" x 2" angle with Fastener #14A at 4" O.C. Seal sides and top of "Z" closures to panel seams with urethane sealant.

MBCI®
Metal Roof and Wall Systems

Houston, TX 877-713-6224
Adel, GA 888-446-6224
Atlanta, GA 877-512-6224
Atwater, CA 800-829-9324
Dallas, TX 800-653-6224
Indianapolis, IN 800-735-6224
Jackson, MS 800-622-4136
Lubbock, TX 800-758-6224
Memphis, TN 800-206-6224
Oklahoma City, OK 800-597-6224
Omaha, NE 800-458-6224
Phoenix, AZ 888-533-6224
Richmond, VA 800-729-6224
Rome, NY 800-559-6224
Salt Lake City, UT 800-874-2404
San Antonio, TX 800-598-6224

ARCHITECTURAL DETAILS

SuperLok®

WOOD DECK
FIELD HEMMING PANEL END

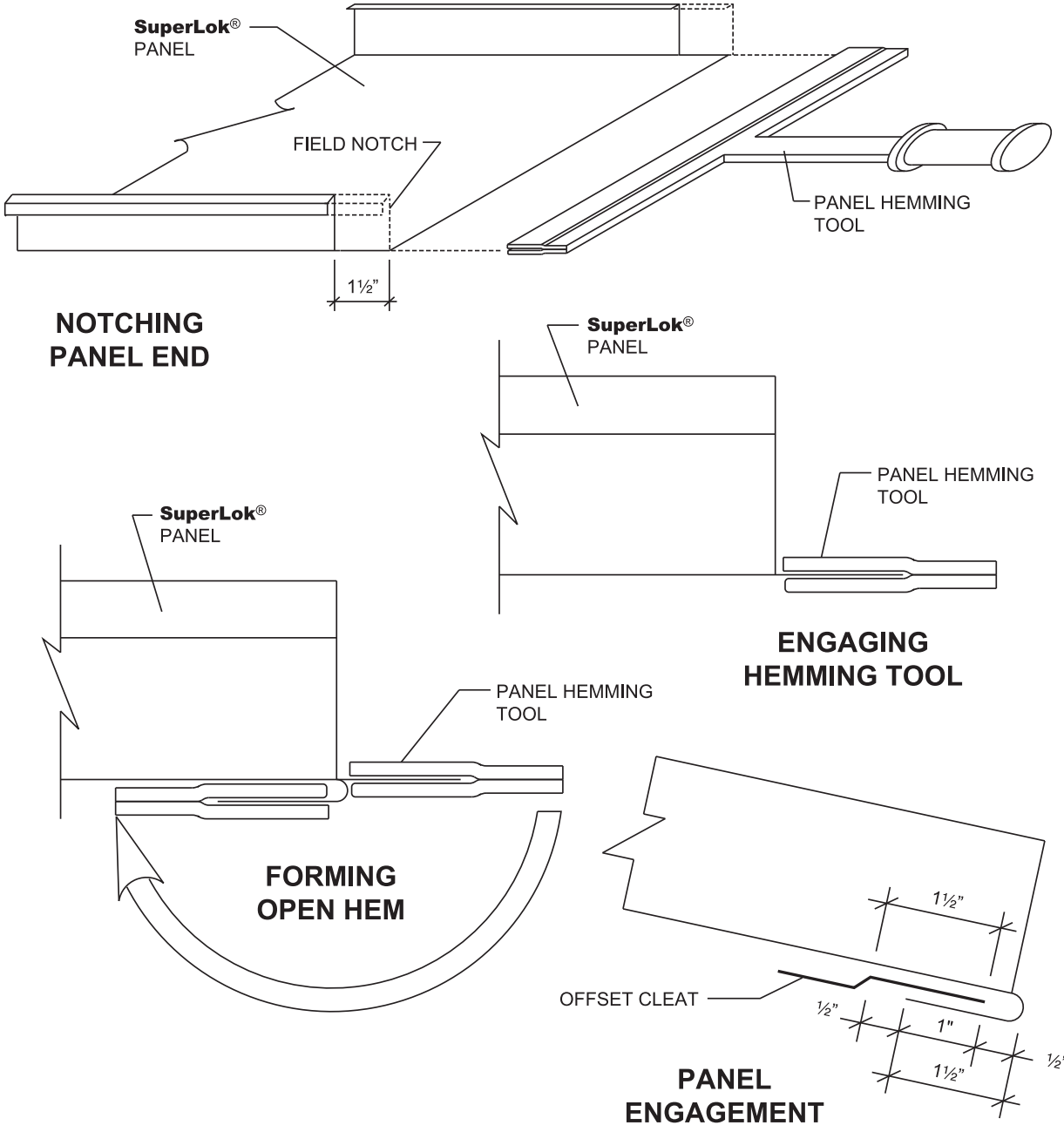

NOTES:

1. Field notch male and female legs of panel 1½".
2. Engage panel hemming tool onto protruding pan of panel.
3. Bend pan of panel down to form an open hem.
4. Hem may be tightened with a pair of Vise-Grip® "duck bills".
5. **Panel engagement shown above is for panel runs up to 100' long. For panel runs over 100' long, please call the manufacturer.**

Houston, TX 877-713-6224
Adel, GA 888-446-6224
Atlanta, GA 877-512-6224
Atwater, CA 800-829-9324
Dallas, TX 800-653-6224
Indianapolis, IN 800-735-6224
Jackson, MS 800-622-4136
Lubbock, TX 800-758-6224
Memphis, TN 800-206-6224
Oklahoma City, OK 800-597-6224
Omaha, NE 800-458-6224
Phoenix, AZ 888-533-6224
Richmond, VA 800-729-6224
Rome, NY 800-559-6224
Salt Lake City, UT 800-874-2404
San Antonio, TX 800-598-6224

MBCI®
Metal Roof and Wall Systems

SuperLok® ARCHITECTURAL DETAILS

WOOD DECK
ENDLAP

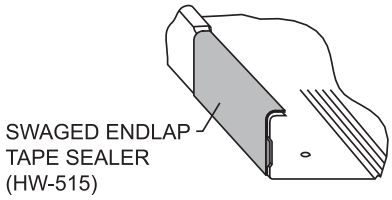

VIEW "A"

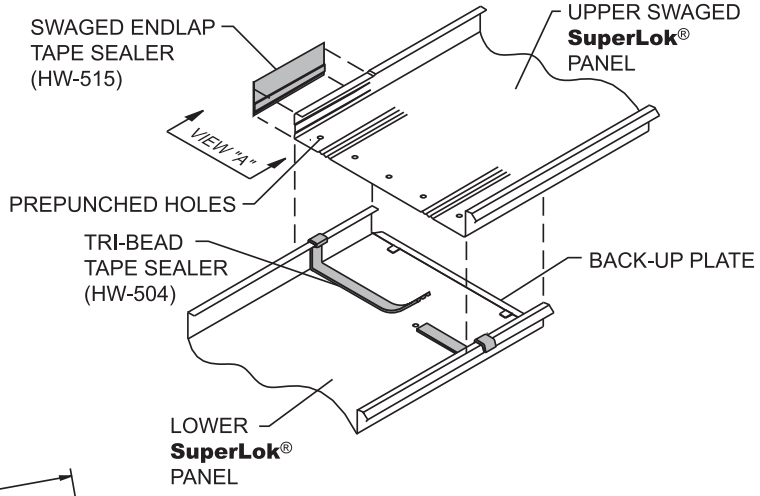

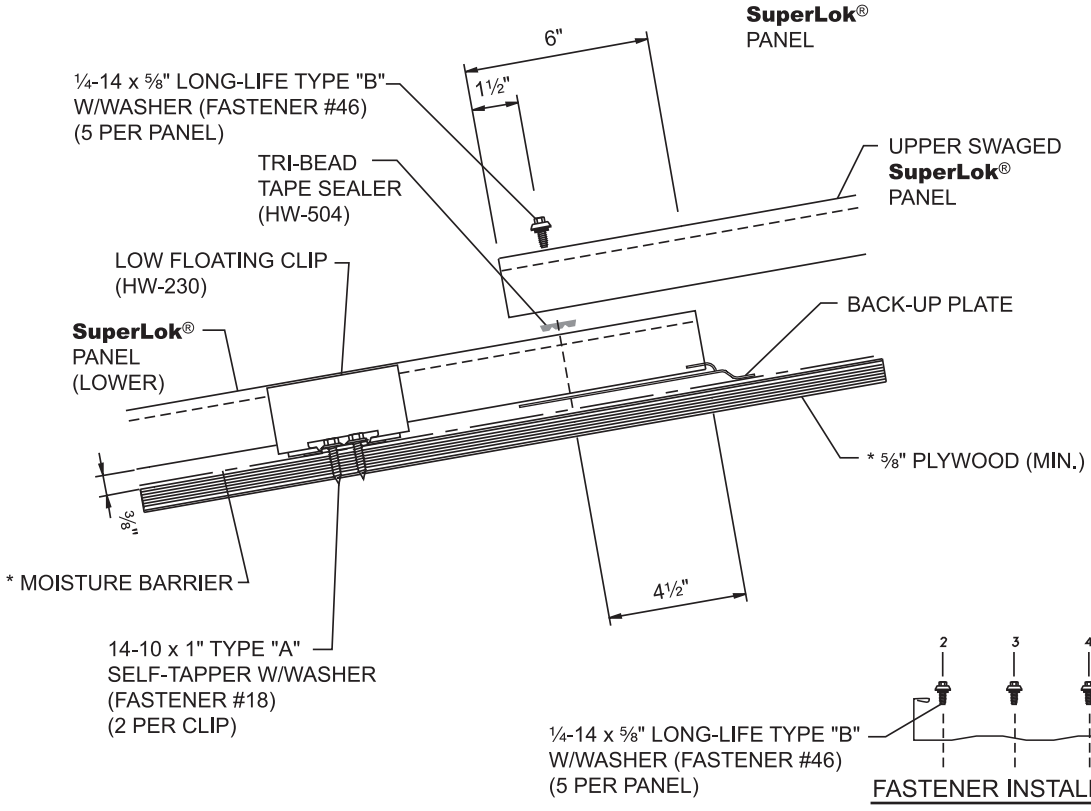

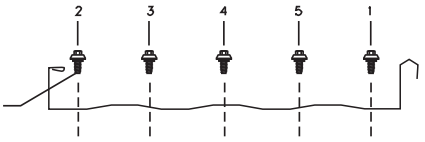

FASTENER INSTALLATION SEQUENCE

***Not by Manufacturer**

MBCI®
Metal Roof and Wall Systems

Houston, TX 877-713-6224
Adel, GA 888-446-6224
Atlanta, GA 877-512-6224
Atwater, CA 800-829-9324
Dallas, TX 800-653-6224
Indianapolis, IN 800-735-6224
Jackson, MS 800-622-4136
Lubbock, TX 800-758-6224
Memphis, TN 800-206-6224
Oklahoma City, OK 800-597-6224
Omaha, NE 800-458-6224
Phoenix, AZ 888-533-6224
Richmond, VA 800-729-6224
Rome, NY 800-559-6224
Salt Lake City, UT 800-874-2404
San Antonio, TX 800-598-6224

ARCHITECTURAL DETAILS

SuperLok®

WOOD DECK
FLOATING EAVE WITH GUTTER

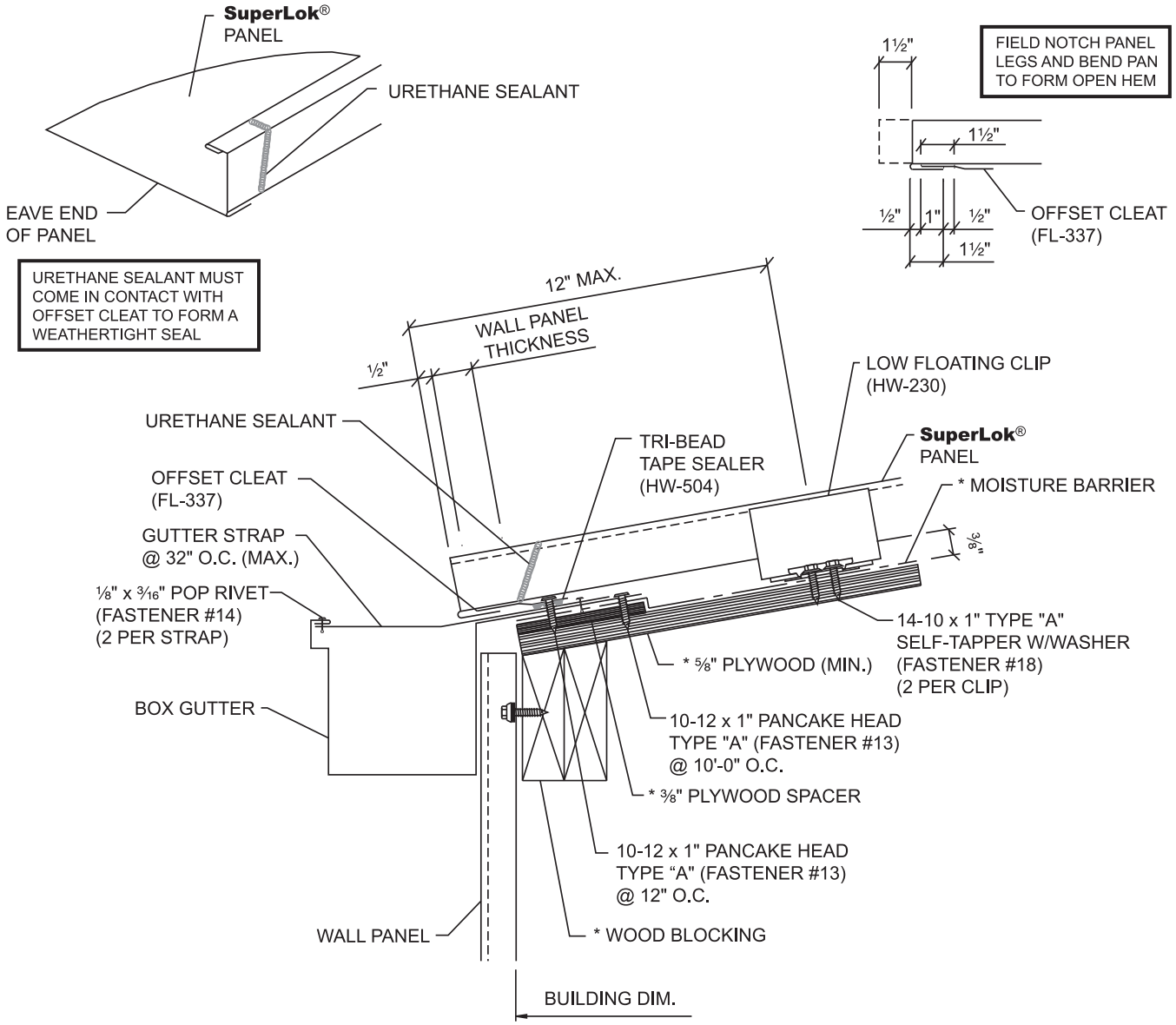

NOTE: DO NOT USE THIS DETAIL ON ROOF SLOPES LESS THAN 3:12

NOTES:

1. The hemmed panel method of attachment should be used when ridge, high side eave or endlap is fixed to the substructure. Panels must be attached at one of these points to prevent them from sliding downslope.
2. Attach offset cleat to eave strut with Fastener #13 at 1'-0" O.C.
3. To field hem panel, see page SL-70.
4. Add 1½" to panel length for the panel hem.
5. The above gutter should not be used in areas that experience snow loads of 10 PSF or higher.
6. **Do not use this detail on roof slopes less than 3:12.**

***Not by Manufacturer**

Houston, TX 877-713-6224
Adel, GA 888-446-6224
Atlanta, GA 877-512-6224
Atwater, CA 800-829-9324
Dallas, TX 800-653-6224
Indianapolis, IN 800-735-6224
Jackson, MS 800-622-4136
Lubbock, TX 800-758-6224
Memphis, TN 800-206-6224
Oklahoma City, OK 800-597-6224
Omaha, NE 800-458-6224
Phoenix, AZ 888-533-6224
Richmond, VA 800-729-6224
Rome, NY 800-559-6224
Salt Lake City, UT 800-874-2404
San Antonio, TX 800-598-6224

MBCI®
Metal Roof and Wall Systems

SuperLok® ARCHITECTURAL DETAILS

WOOD DECK
FLOATING EAVE WITH EAVE TRIM

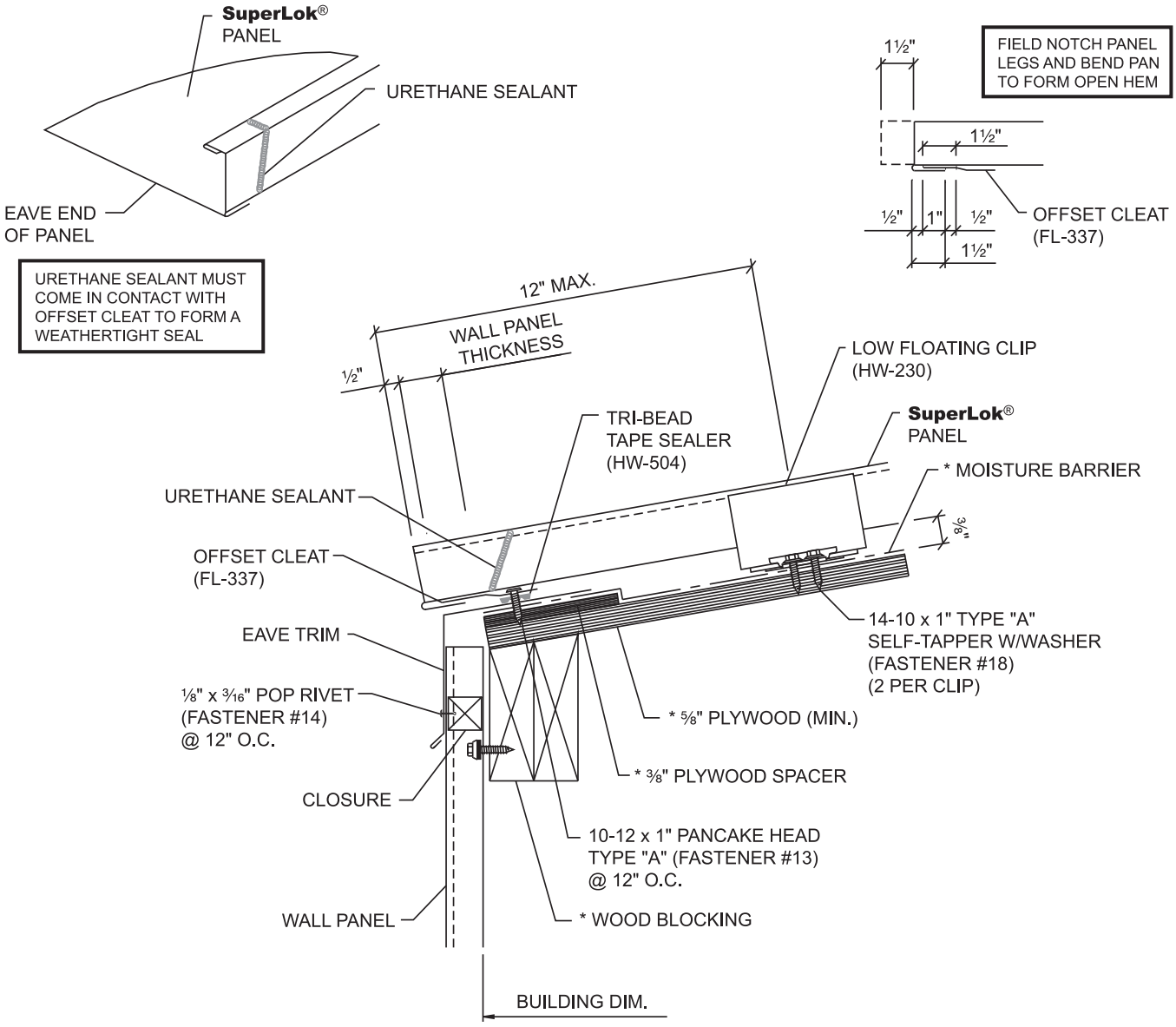

NOTE: DO NOT USE THIS DETAIL ON ROOF SLOPES LESS THAN 3:12

NOTES:

1. **The hemmed panel method of attachment should be used when ridge, high side eave or endlap is fixed to the substructure. Panels must be attached at one of these points to prevent them from sliding downslope.**
2. Attach offset cleat with Fastener #13 at 1'-0" O.C.
3. To field hem panel, see page SL-70.
4. Add 1½" to panel length for the panel hem.
5. **Do not use this detail on roof slopes less than 3:12.**

***Not by Manufacturer**

MBCI®
Metal Roof and Wall Systems

Houston, TX 877-713-6224
Adel, GA 888-446-6224
Atlanta, GA 877-512-6224
Atwater, CA 800-829-9324
Dallas, TX 800-653-6224
Indianapolis, IN 800-735-6224
Jackson, MS 800-622-4136
Lubbock, TX 800-758-6224
Memphis, TN 800-206-6224
Oklahoma City, OK 800-597-6224
Omaha, NE 800-458-6224
Phoenix, AZ 888-533-6224
Richmond, VA 800-729-6224
Rome, NY 800-559-6224
Salt Lake City, UT 800-874-2404
San Antonio, TX 800-598-6224

ARCHITECTURAL DETAILS

SuperLok®

WOOD DECK
FIXED RIDGE

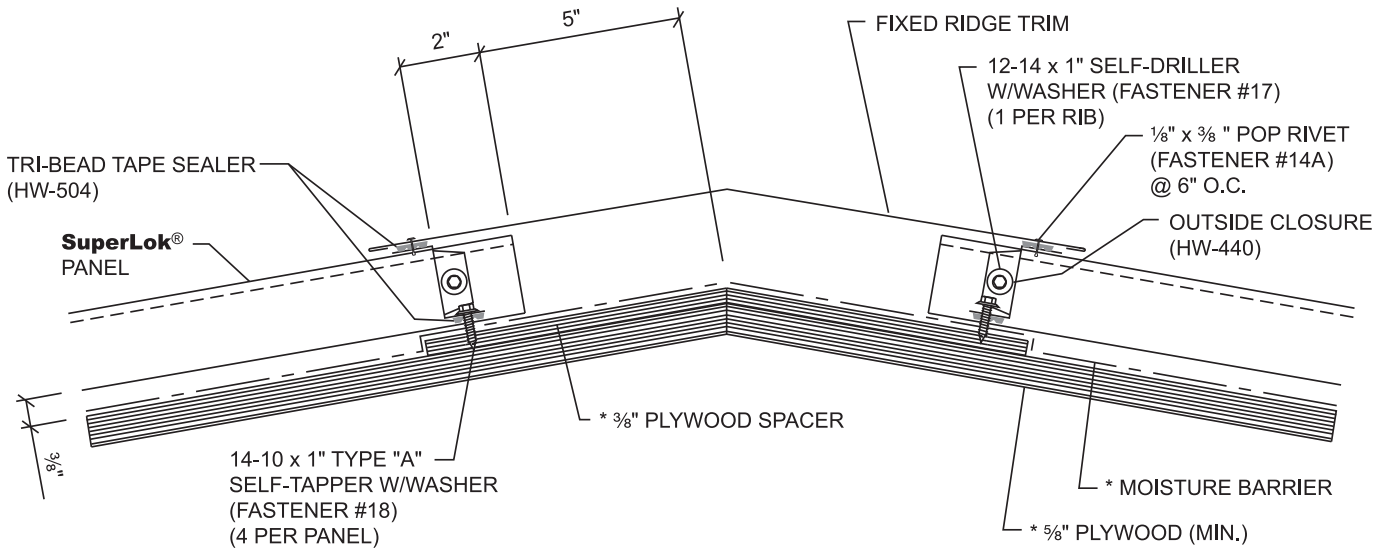

NOTES:

1. Ridge must have an offset support spacer.
2. Install outside closure as shown on page SL-37
3. Install Tri-Bead tape sealer to top leg of outside closure.
4. Attach ridge/hip flash to outside closures with Fastener #14A at 6" O.C.

***Not by Manufacturer**

Houston, TX 877-713-6224
Adel, GA 888-446-6224
Atlanta, GA 877-512-6224
Atwater, CA 800-829-9324
Dallas, TX 800-653-6224
Indianapolis, IN 800-735-6224
Jackson, MS 800-622-4136
Lubbock, TX 800-758-6224
Memphis, TN 800-206-6224
Oklahoma City, OK 800-597-6224
Omaha, NE 800-458-6224
Phoenix, AZ 888-533-6224
Richmond, VA 800-729-6224
Rome, NY 800-559-6224
Salt Lake City, UT 800-874-2404
San Antonio, TX 800-598-6224

MBCI®
Metal Roof and Wall Systems

SuperLok® ARCHITECTURAL DETAILS

WOOD DECK
FIXED VENTED RIDGE

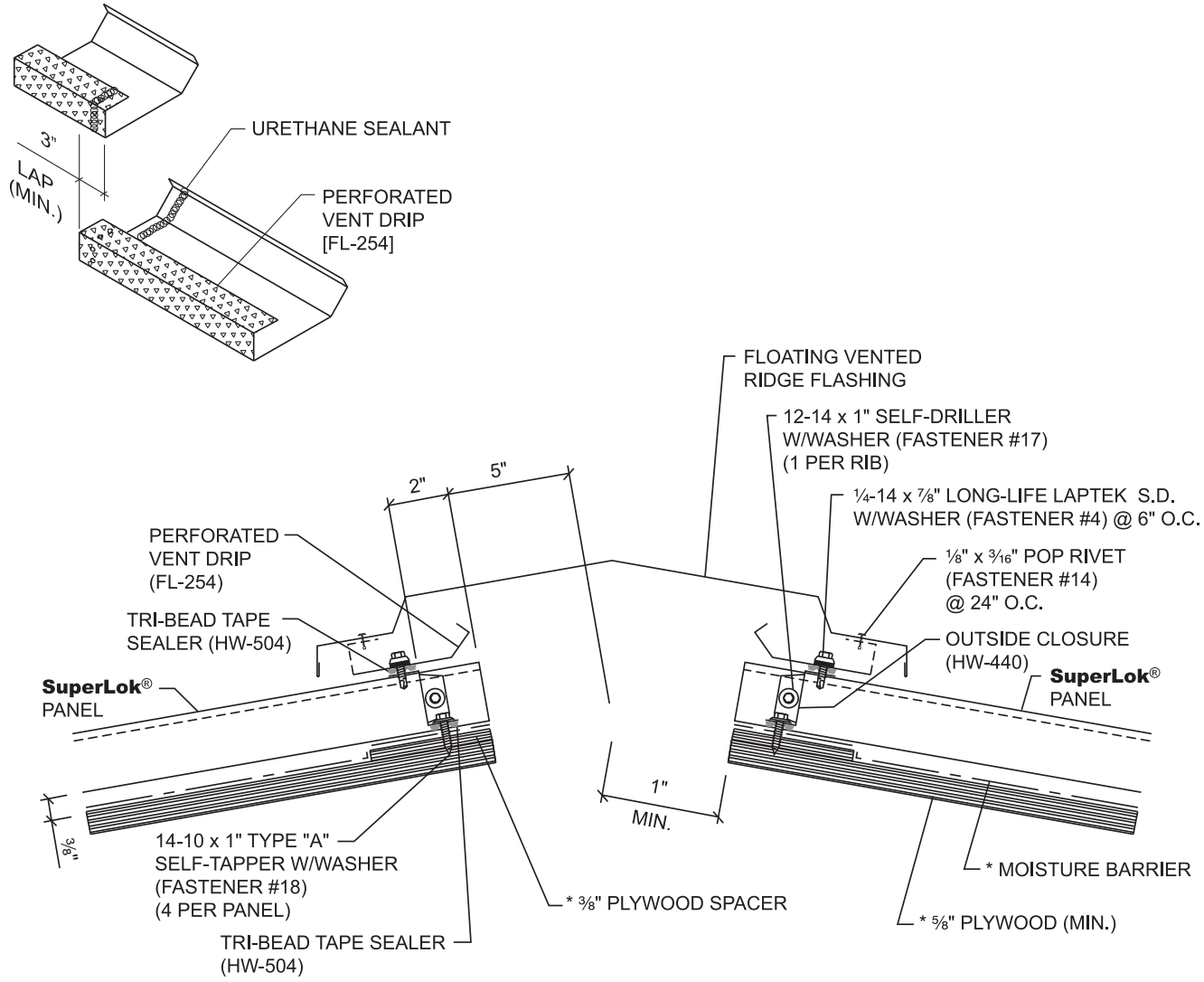

NOTES:

1. Ridge must have an offset support spacer (Leave opening at ridge to allow ventilation)
2. Install outside closures as shown on page SL-37.
3. Install Tri-Bead tape sealer to top leg of outside closure.
4. Attach perforated vent drip to outside closure with Fastener #4. Seal laps in vent drip with urethane sealant.
5. Attach ridge flash to vent drip with Fastener #14 at 24" O.C.

***Not by Manufacturer**

MBCI®
Metal Roof and Wall Systems

Houston, TX 877-713-6224
Adel, GA 888-446-6224
Atlanta, GA 877-512-6224
Atwater, CA 800-829-9324
Dallas, TX 800-653-6224
Indianapolis, IN 800-735-6224
Jackson, MS 800-622-4136
Lubbock, TX 800-758-6224
Memphis, TN 800-206-6224
Oklahoma City, OK 800-597-6224
Omaha, NE 800-458-6224
Phoenix, AZ 888-533-6224
Richmond, VA 800-729-6224
Rome, NY 800-559-6224
Salt Lake City, UT 800-874-2404
San Antonio, TX 800-598-6224

ARCHITECTURAL DETAILS

SuperLok®

WOOD DECK
RAKE

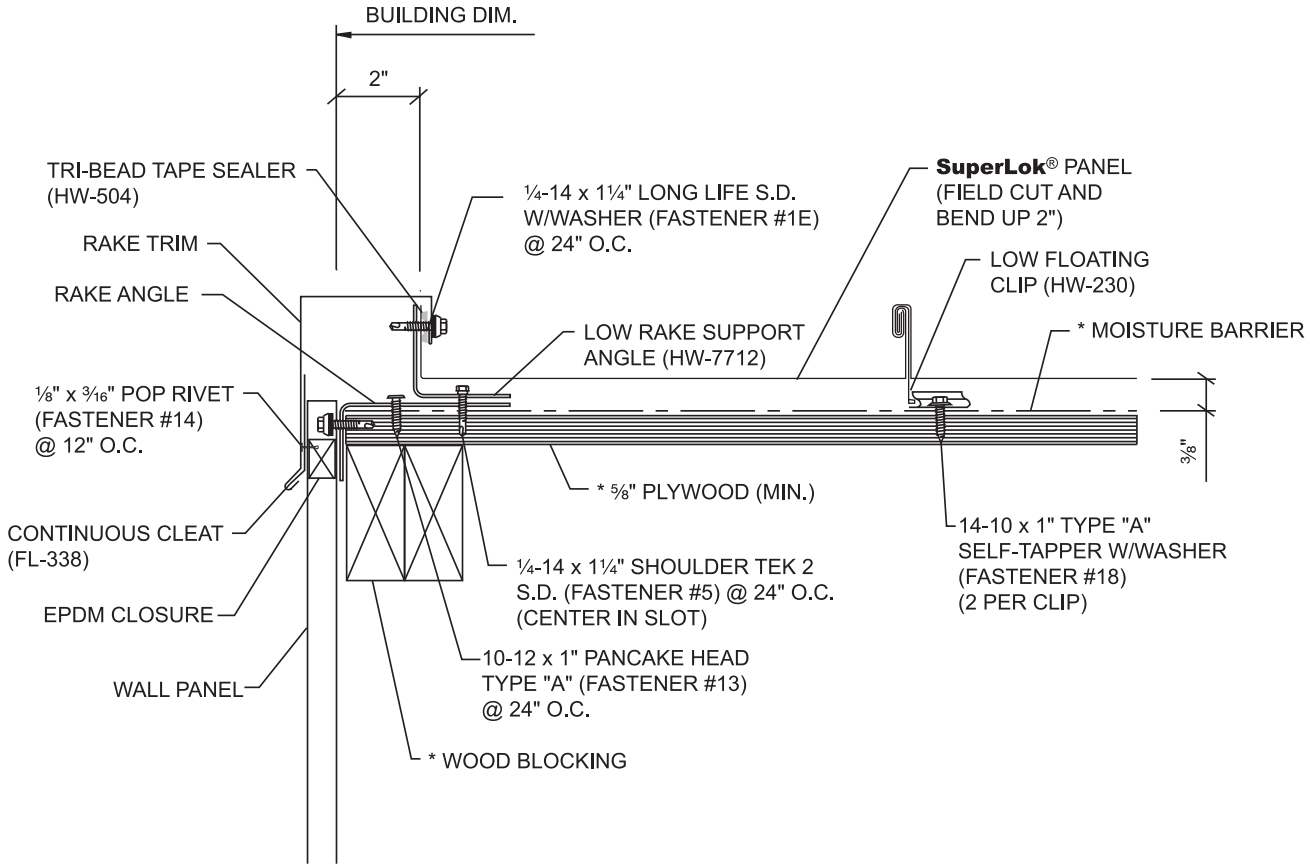

NOTES:

1. Install rake support with Fastener #5 at 2'-0" O.C.
2. Engage female leg of panel over rake support.
3. Apply Tri-Bead tape sealer to vertical leg of panel.
4. Attach continuous cleat to wall panels with Fastener #14 at each high rib.
5. Install rake trim with Fastener #1E at 2'-0" O.C. **Fastener must go through rake support.**
6. If roof finishes on module, finishing detail will be similar to starting detail except, field cut top of panel rib so only the vertical leg of the panel remains. If roof finishes off module, field cut and bend last panel to fit against rake support.

***Not by Manufacturer**

Houston, TX 877-713-6224
Adel, GA 888-446-6224
Atlanta, GA 877-512-6224
Atwater, CA 800-829-9324
Dallas, TX 800-653-6224
Indianapolis, IN 800-735-6224
Jackson, MS 800-622-4136
Lubbock, TX 800-758-6224
Memphis, TN 800-206-6224
Oklahoma City, OK 800-597-6224
Omaha, NE 800-458-6224
Phoenix, AZ 888-533-6224
Richmond, VA 800-729-6224
Rome, NY 800-559-6224
Salt Lake City, UT 800-874-2404
San Antonio, TX 800-598-6224

MBCI®
Metal Roof and Wall Systems

SuperLok® ARCHITECTURAL DETAILS

WOOD DECK
PARAPET RAKE

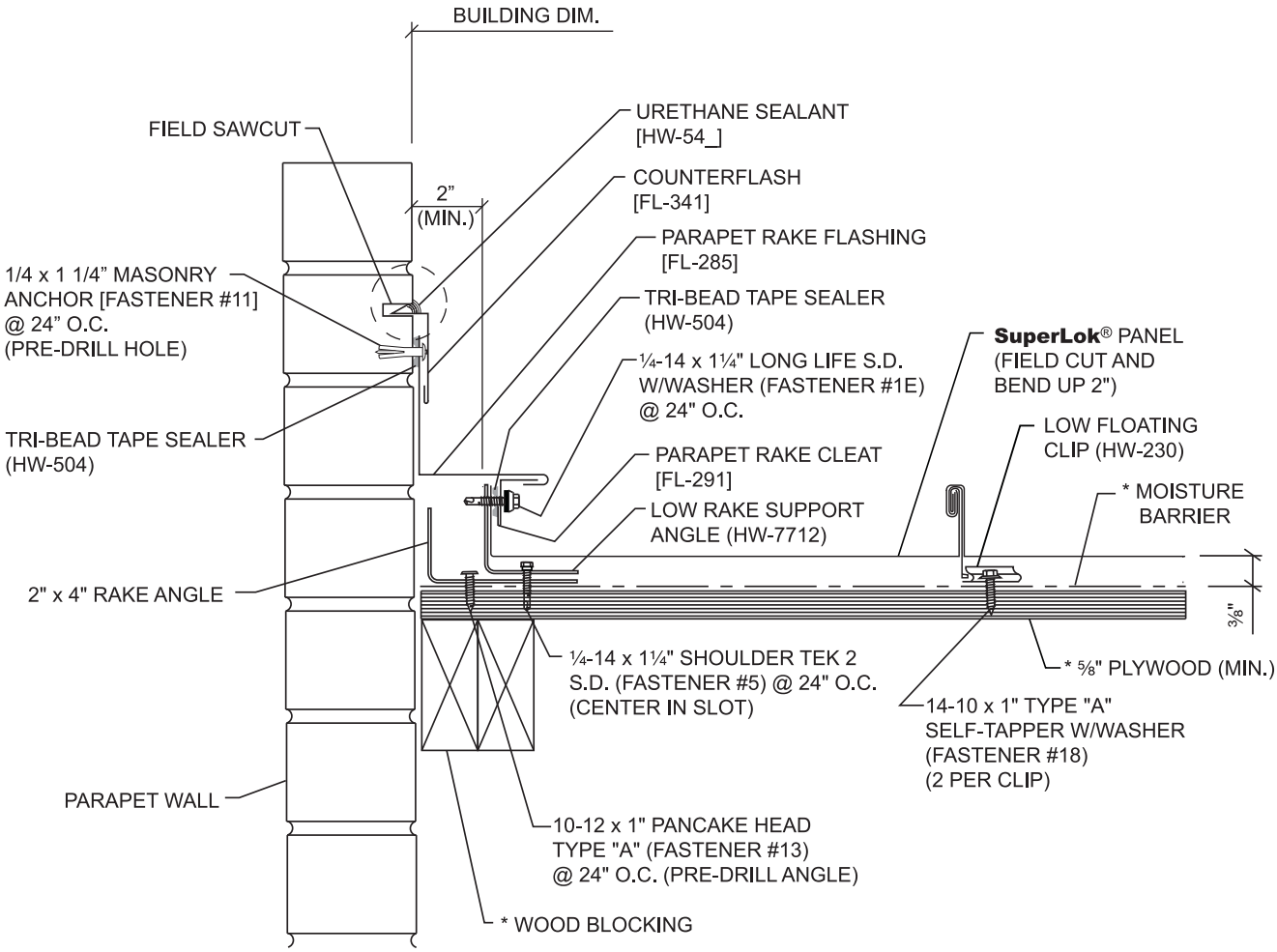

NOTES:

1. Install rake support with Fastener #5 at 2'-0" o.c.
2. Engage female leg of panel over rake support.
3. Apply Tri-Bead tape sealer to vertical leg of panel. Install parapet rake cleat to panel leg with Fastener #1E at 2'-0" o.c. Fasteners must go through rake support.
4. Install parapet rake flash by engaging open hem over parapet rake cleat. Tie vertical leg of parapet rake flash to parapet wall with Fastener #11.
5. If roof finishes on module, finishing detail will be similar to starting detail except, field cut top of panel rib so only the vertical leg of the panel remains. If roof finishes off module, field cut and bend last panel run to fit against rake support. Install tape sealer, parapet rake cleat, and parapet rake flash as previously described.
6. If parapet rake flash is not to be immediately installed, temporarily fasten panels to rake support to prevent wind damage.

MBCI®
Metal Roof and Wall Systems

Houston, TX 877-713-6224
Adel, GA 888-446-6224
Atlanta, GA 877-512-6224
Atwater, CA 800-829-9324
Dallas, TX 800-653-6224
Indianapolis, IN 800-735-6224
Jackson, MS 800-622-4136
Lubbock, TX 800-758-6224
Memphis, TN 800-206-6224
Oklahoma City, OK 800-597-6224
Omaha, NE 800-458-6224
Phoenix, AZ 888-533-6224
Richmond, VA 800-729-6224
Rome, NY 800-559-6224
Salt Lake City, UT 800-874-2404
San Antonio, TX 800-598-6224

ARCHITECTURAL DETAILS

SuperLok®

WOOD DECK
FIXED HIGH SIDE EAVE

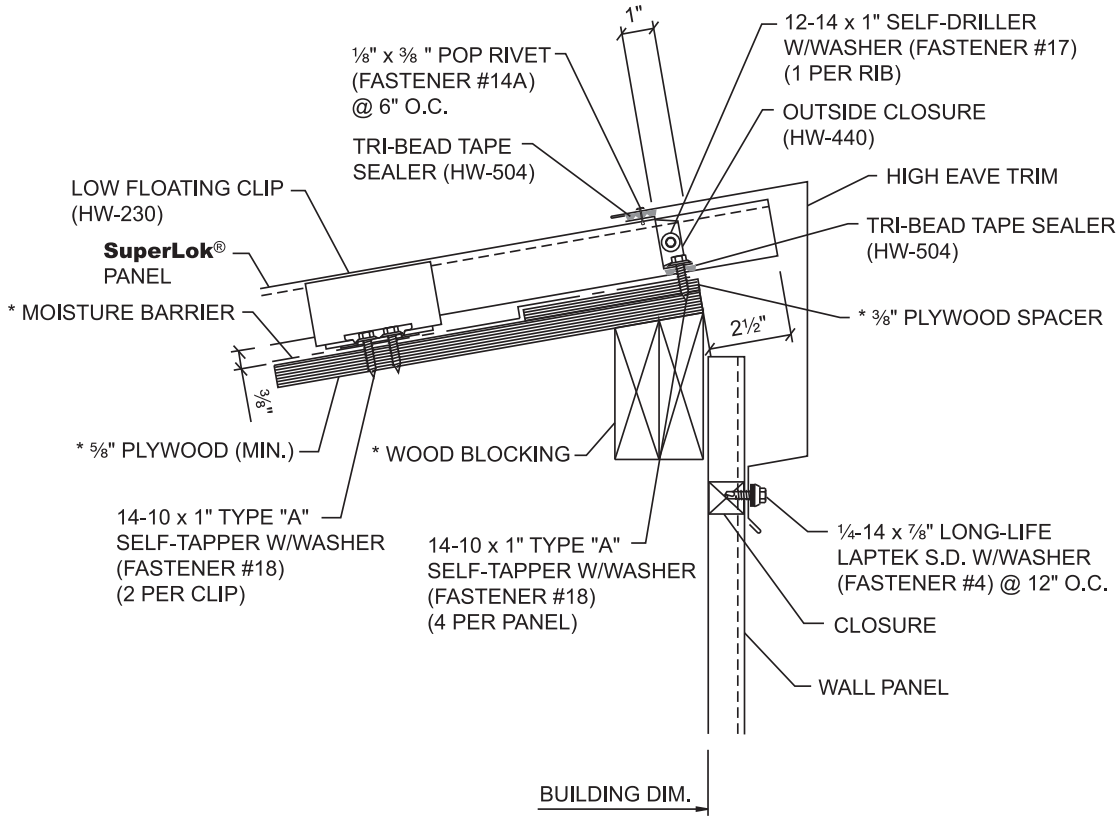

NOTES:

1. High side eave must have an offset support spacer.
2. Install outside closure as shown on page SL-37.
3. Install Tri-Bead tape sealer to top leg of outside closure.
4. Attach high eave trim to outside closure with Fastener #14A at 6" O.C.

***Not by Manufacturer**

Houston, TX 877-713-6224
Adel, GA 888-446-6224
Atlanta, GA 877-512-6224
Atwater, CA 800-829-9324
Dallas, TX 800-653-6224
Indianapolis, IN 800-735-6224
Jackson, MS 800-622-4136
Lubbock, TX 800-758-6224
Memphis, TN 800-206-6224
Oklahoma City, OK 800-597-6224
Omaha, NE 800-458-6224
Phoenix, AZ 888-533-6224
Richmond, VA 800-729-6224
Rome, NY 800-559-6224
Salt Lake City, UT 800-874-2404
San Antonio, TX 800-598-6224

MBCI®
Metal Roof and Wall Systems

SuperLok® ARCHITECTURAL DETAILS

WOOD DECK
PARAPET FIXED HIGH SIDE EAVE

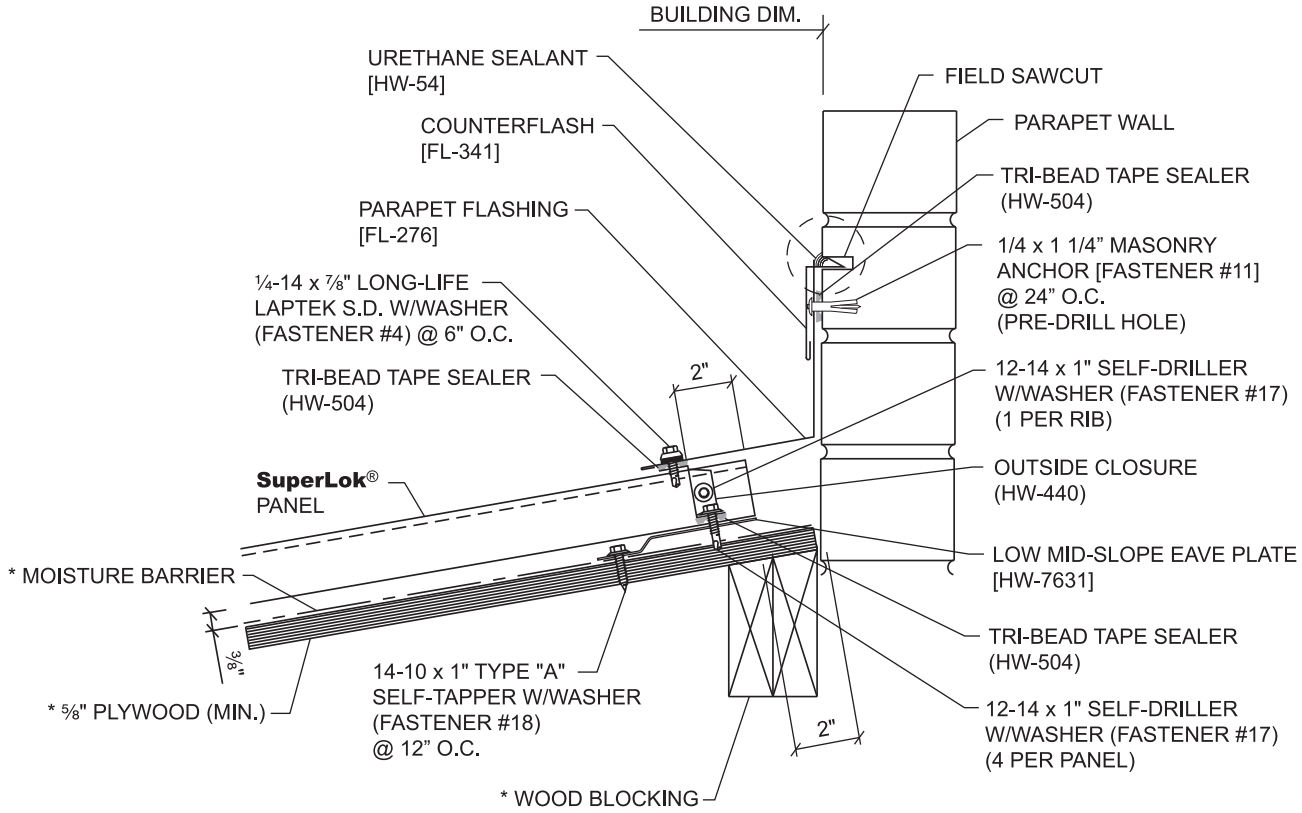

NOTES:

1. High side eave must have an offset support spacer.
2. Install outside closure as shown on page SL-37.
3. Install Tri-Bead tape sealer to top leg of outside closure.
4. Attach high eave trim to outside closure with Fastener #14 at 6" o.c.

***Not by Manufacturer**

MBCI®
Metal Roof and Wall Systems

Houston, TX 877-713-6224
Adel, GA 888-446-6224
Atlanta, GA 877-512-6224
Atwater, CA 800-829-9324
Dallas, TX 800-653-6224
Indianapolis, IN 800-735-6224
Jackson, MS 800-622-4136
Lubbock, TX 800-758-6224
Memphis, TN 800-206-6224
Oklahoma City, OK 800-597-6224
Omaha, NE 800-458-6224
Phoenix, AZ 888-533-6224
Richmond, VA 800-729-6224
Rome, NY 800-559-6224
Salt Lake City, UT 800-874-2404
San Antonio, TX 800-598-6224

ARCHITECTURAL DETAILS

SuperLok®

WOOD DECK
FLOATING VALLEY

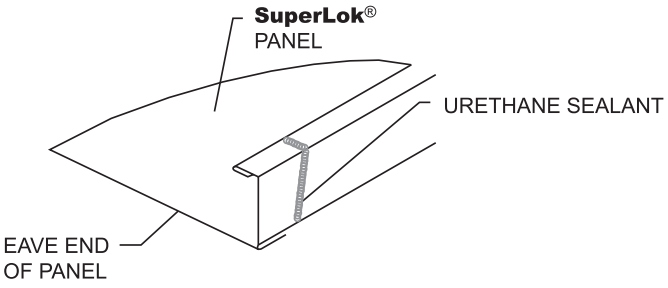

URETHANE SEALANT MUST COME IN CONTACT WITH OFFSET CLEAT TO FORM A WEATHERTIGHT SEAL

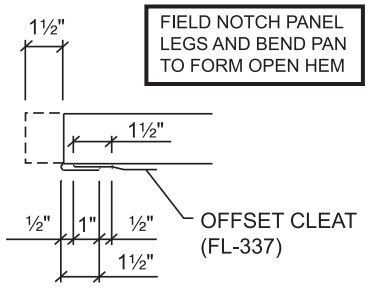

FIELD NOTCH PANEL LEGS AND BEND PAN TO FORM OPEN HEM

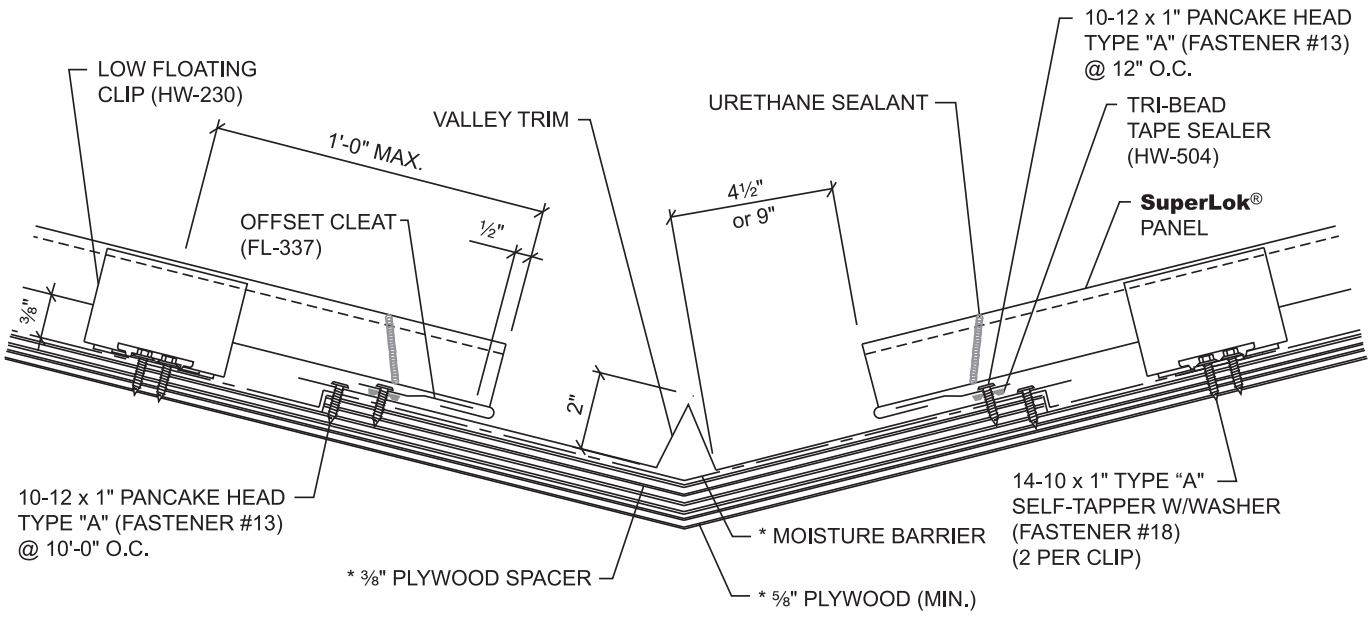

NOTE: DO NOT USE THIS DETAIL ON ROOF SLOPES LESS THAN 3:12

NOTES:

1. For valleys longer than 30', use extended valley trim.
2. **The hemmed panel method of attachment should be used when ridge, high side eave or endlap is fixed to the substructure. Panels must be attached at one of these points to prevent them from downslope.**
3. To field hem panel, see page SL-70.
4. Add 1½" to panel length for the panel hem.
5. **Do not use this detail on roof slopes less than 3:12.**
6. On High Systems, overhang the panels ½" downslope from the 1" vertical leg of the valley trim to keep water off of upper leg of valley trim.

***Not by Manufacturer**

Houston, TX 877-713-6224
Adel, GA 888-446-6224
Atlanta, GA 877-512-6224
Atwater, CA 800-829-9324
Dallas, TX 800-653-6224
Indianapolis, IN 800-735-6224
Jackson, MS 800-622-4136
Lubbock, TX 800-758-6224
Memphis, TN 800-206-6224
Oklahoma City, OK 800-597-6224
Omaha, NE 800-458-6224
Phoenix, AZ 888-533-6224
Richmond, VA 800-729-6224
Rome, NY 800-559-6224
Salt Lake City, UT 800-874-2404
San Antonio, TX 800-598-6224

MBCI®
Metal Roof and Wall Systems

SuperLok® ARCHITECTURAL DETAILS

WOOD DECK
FIXED HIP

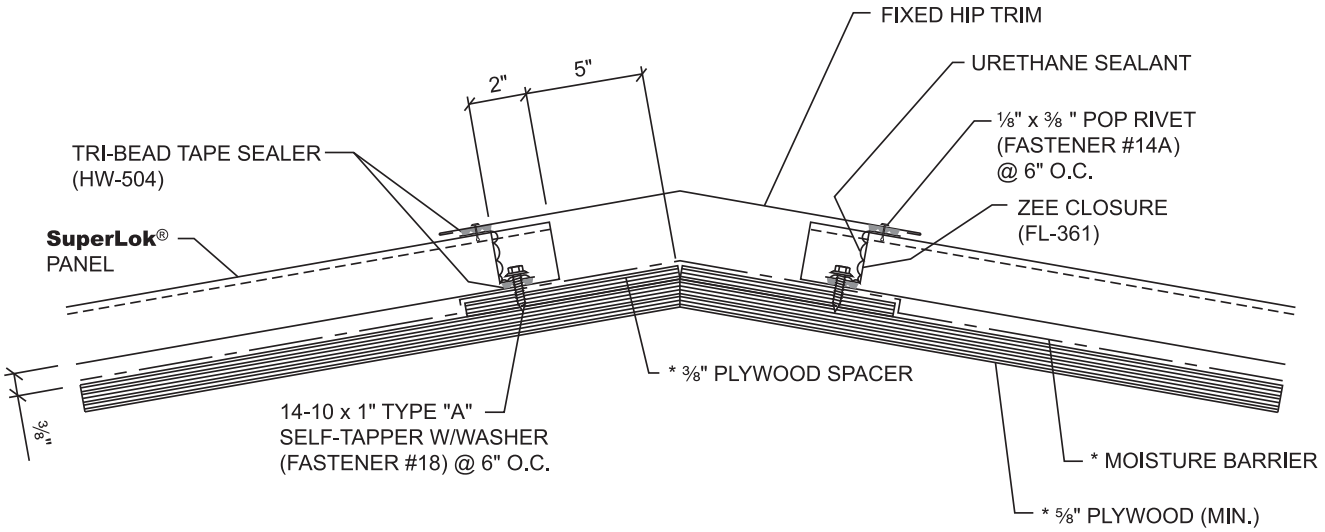

NOTES:

1. Hip must have an offset support spacer.
2. Bevel cut and install panels to follow slope of hip.
3. Install Tri-Bead tape sealer to pans of panels, running parallel to the hip. Center of tape sealer should be 1½" from end of panels.
4. Bevel cut and install "Z" closures to panels and hip plate with Fastener #18 at 6" O.C. Vertical leg of "Z" closure should be 4" from center of hip. Seal sides and top of "Z" closures to panel seams with urethane sealant.
5. Attach ridge/hip flash to outside closures with Fastener #14A at 6" O.C.

***Not by Manufacturer**

MBCI®
Metal Roof and Wall Systems

Houston, TX 877-713-6224
Adel, GA 888-446-6224
Atlanta, GA 877-512-6224
Atwater, CA 800-829-9324
Dallas, TX 800-653-6224
Indianapolis, IN 800-735-6224
Jackson, MS 800-622-4136
Lubbock, TX 800-758-6224
Memphis, TN 800-206-6224
Oklahoma City, OK 800-597-6224
Omaha, NE 800-458-6224
Phoenix, AZ 888-533-6224
Richmond, VA 800-729-6224
Rome, NY 800-559-6224
Salt Lake City, UT 800-874-2404
San Antonio, TX 800-598-6224

ARCHITECTURAL DETAILS

SuperLok®

RIGID INSULATION OVER METAL DECK
ENDLAP

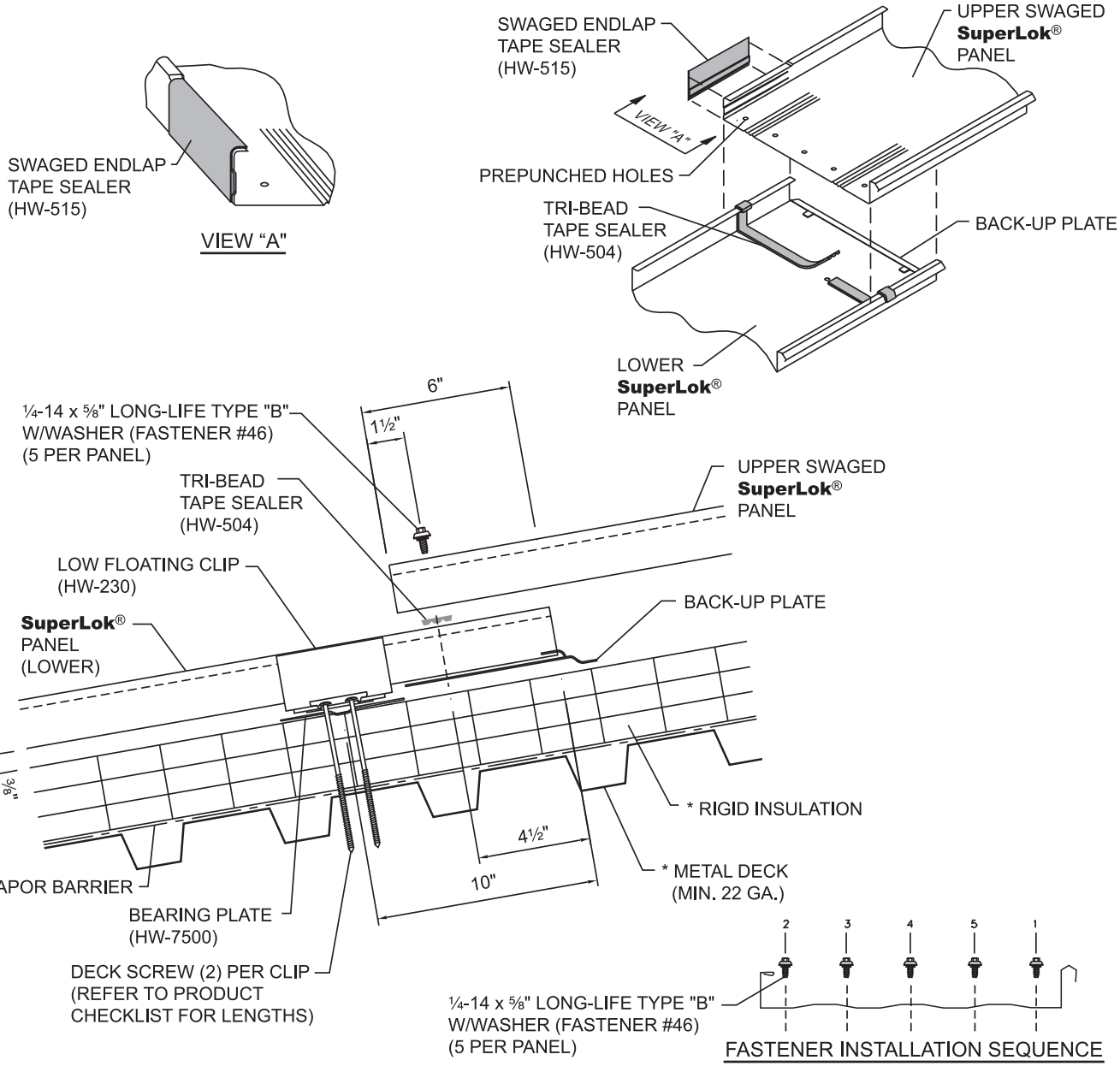

***Not by Manufacturer**

Houston, TX 877-713-6224
Adel, GA 888-446-6224
Atlanta, GA 877-512-6224
Atwater, CA 800-829-9324
Dallas, TX 800-653-6224
Indianapolis, IN 800-735-6224
Jackson, MS 800-622-4136
Lubbock, TX 800-758-6224
Memphis, TN 800-206-6224
Oklahoma City, OK 800-597-6224
Omaha, NE 800-458-6224
Phoenix, AZ 888-533-6224
Richmond, VA 800-729-6224
Rome, NY 800-559-6224
Salt Lake City, UT 800-874-2404
San Antonio, TX 800-598-6224

MBCI®
Metal Roof and Wall Systems

SuperLok® ARCHITECTURAL DETAILS

RIGID INSULATION OVER METAL DECK
FLOATING EAVE WITH GUTTER

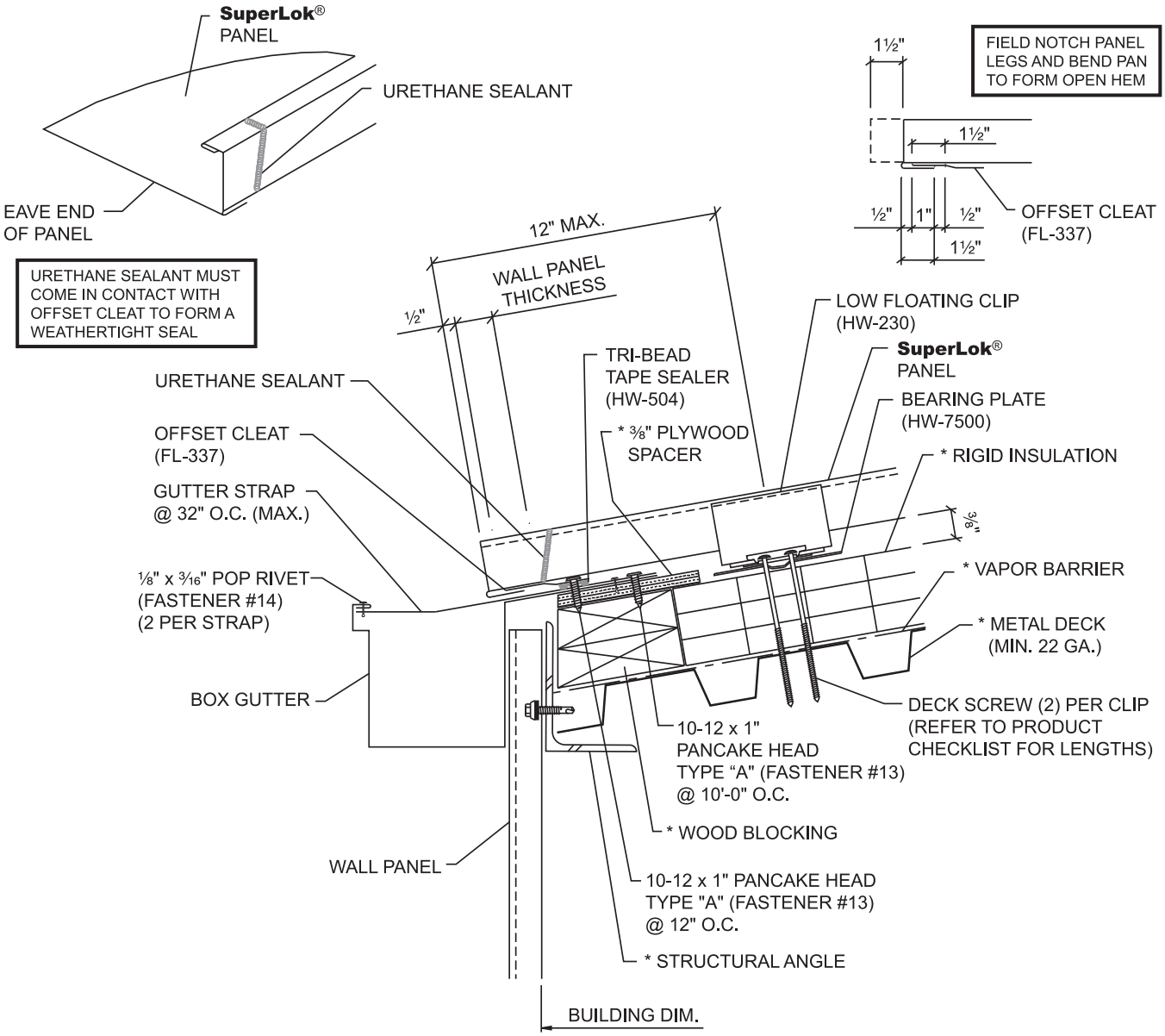

NOTE: DO NOT USE THIS DETAIL ON ROOF SLOPES LESS THAN 3:12

NOTES:

1. **The hemmed panel method of attachment should be used when ridge, high side eave or endlap is fixed to the substructure. Panels must be attached at one of these points to prevent them from sliding downslope.**
2. Attach offset cleat with Fastener #13 at 1'-0" O.C.
3. To field hem panel, see page SL-70.
4. Add 1½" to panel length for the panel hem.
5. The above gutter should not be used in areas that experience snow loads of 10 PSF or higher.
6. **Do not use this detail on roof slopes less than 3:12.**

***Not by Manufacturer**

MBCI®
Metal Roof and Wall Systems

Houston, TX 877-713-6224
Adel, GA 888-446-6224
Atlanta, GA 877-512-6224
Atwater, CA 800-829-9324
Dallas, TX 800-653-6224
Indianapolis, IN 800-735-6224
Jackson, MS 800-622-4136
Lubbock, TX 800-758-6224
Memphis, TN 800-206-6224
Oklahoma City, OK 800-597-6224
Omaha, NE 800-458-6224
Phoenix, AZ 888-533-6224
Richmond, VA 800-729-6224
Rome, NY 800-559-6224
Salt Lake City, UT 800-874-2404
San Antonio, TX 800-598-6224

ARCHITECTURAL DETAILS

SuperLok®

RIGID INSULATION OVER METAL DECK
FLOATING EAVE WITH EAVE TRIM

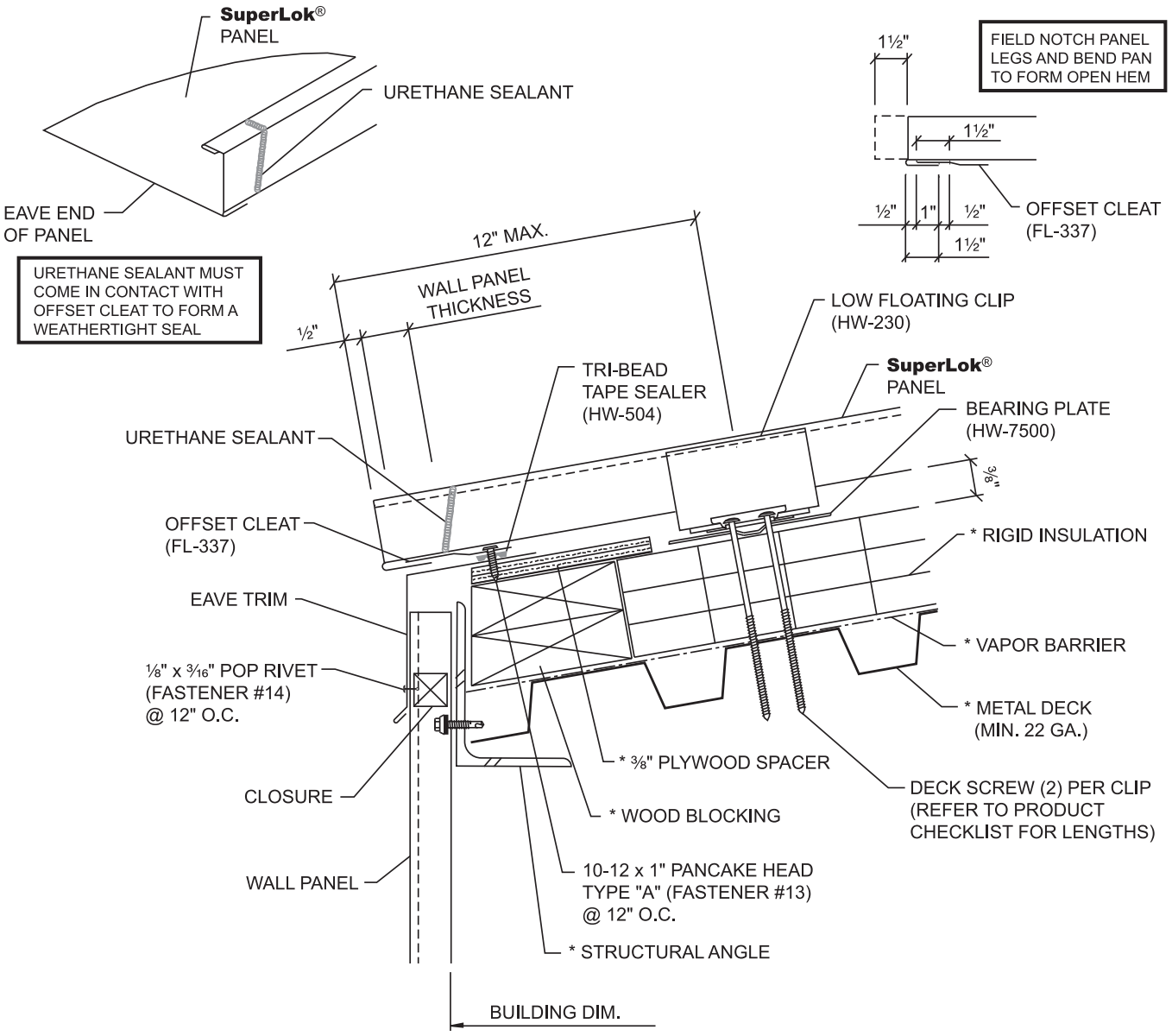

NOTE: DO NOT USE THIS DETAIL ON ROOF SLOPES LESS THAN 3:12

NOTES:

1. **The hemmed panel method of attachment should be used when ridge, high side eave or endlap is fixed to the substructure. Panels must be attached at one of these points to prevent them from sliding downslope.**
2. Attach offset cleat with Fastener #13 at 1'-0" O.C.
3. To field hem panel, see page SL-70.
4. Add 1½" to panel length for the panel hem.
5. **Do not use this detail on roof slopes less than 3:12.**

***Not by Manufacturer**

Houston, TX 877-713-6224
Adel, GA 888-446-6224
Atlanta, GA 877-512-6224
Atwater, CA 800-829-9324
Dallas, TX 800-653-6224
Indianapolis, IN 800-735-6224
Jackson, MS 800-622-4136
Lubbock, TX 800-758-6224
Memphis, TN 800-206-6224
Oklahoma City, OK 800-597-6224
Omaha, NE 800-458-6224
Phoenix, AZ 888-533-6224
Richmond, VA 800-729-6224
Rome, NY 800-559-6224
Salt Lake City, UT 800-874-2404
San Antonio, TX 800-598-6224

MBCI®
Metal Roof and Wall Systems

SuperLok® ARCHITECTURAL DETAILS

RIGID INSULATION OVER METAL DECK
FIXED RIDGE

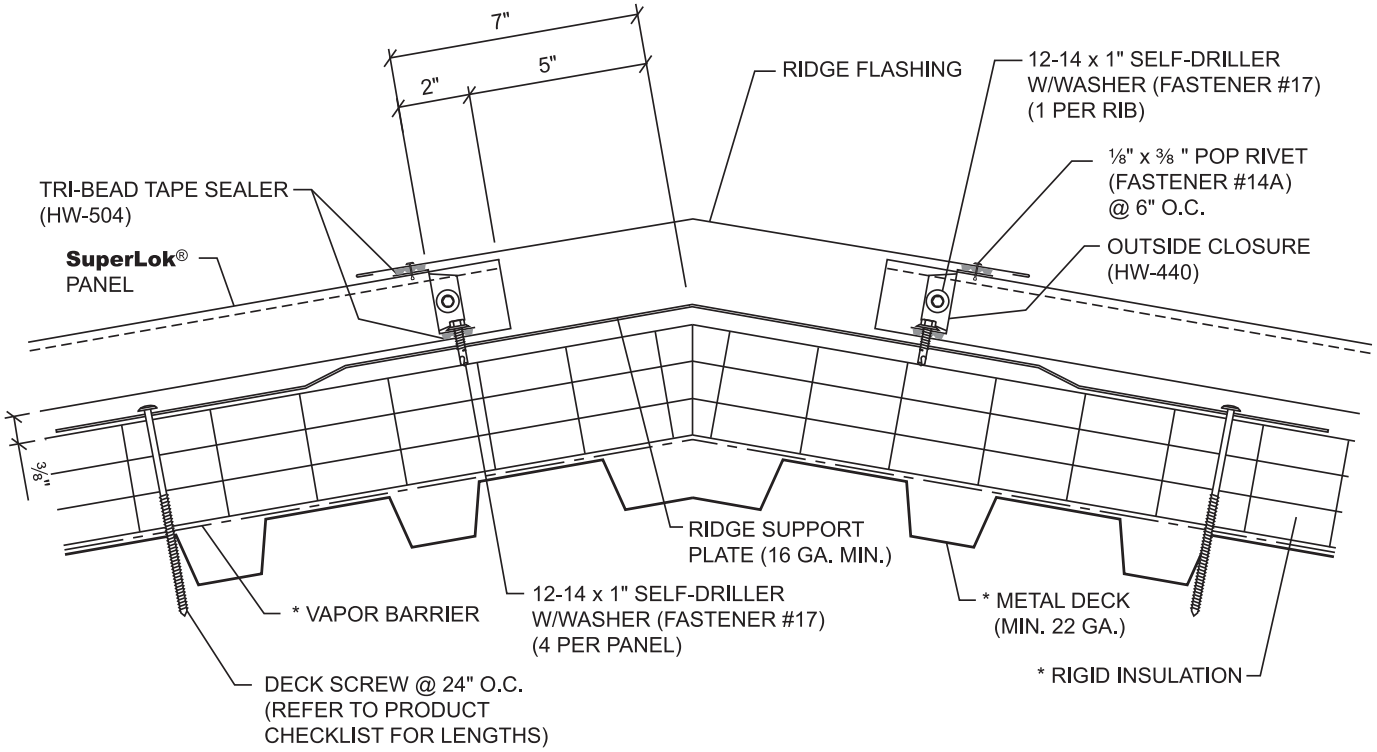

NOTES:

1. Ridge must have an offset support plate.
2. Install outside closures as shown on page SL-37.
3. Install Tri-Bead tape sealer to top leg of outside closure.
4. Attach ridge/hip flash to outside closures with Fastener #14A at 6" O.C.

***Not by Manufacturer**

MBCI®
Metal Roof and Wall Systems

Houston, TX 877-713-6224
Adel, GA 888-446-6224
Atlanta, GA 877-512-6224
Atwater, CA 800-829-9324
Dallas, TX 800-653-6224
Indianapolis, IN 800-735-6224
Jackson, MS 800-622-4136
Lubbock, TX 800-758-6224
Memphis, TN 800-206-6224
Oklahoma City, OK 800-597-6224
Omaha, NE 800-458-6224
Phoenix, AZ 888-533-6224
Richmond, VA 800-729-6224
Rome, NY 800-559-6224
Salt Lake City, UT 800-874-2404
San Antonio, TX 800-598-6224

ARCHITECTURAL DETAILS

SuperLok®

RIGID INSULATION OVER METAL DECK
FIXED VENTED RIDGE

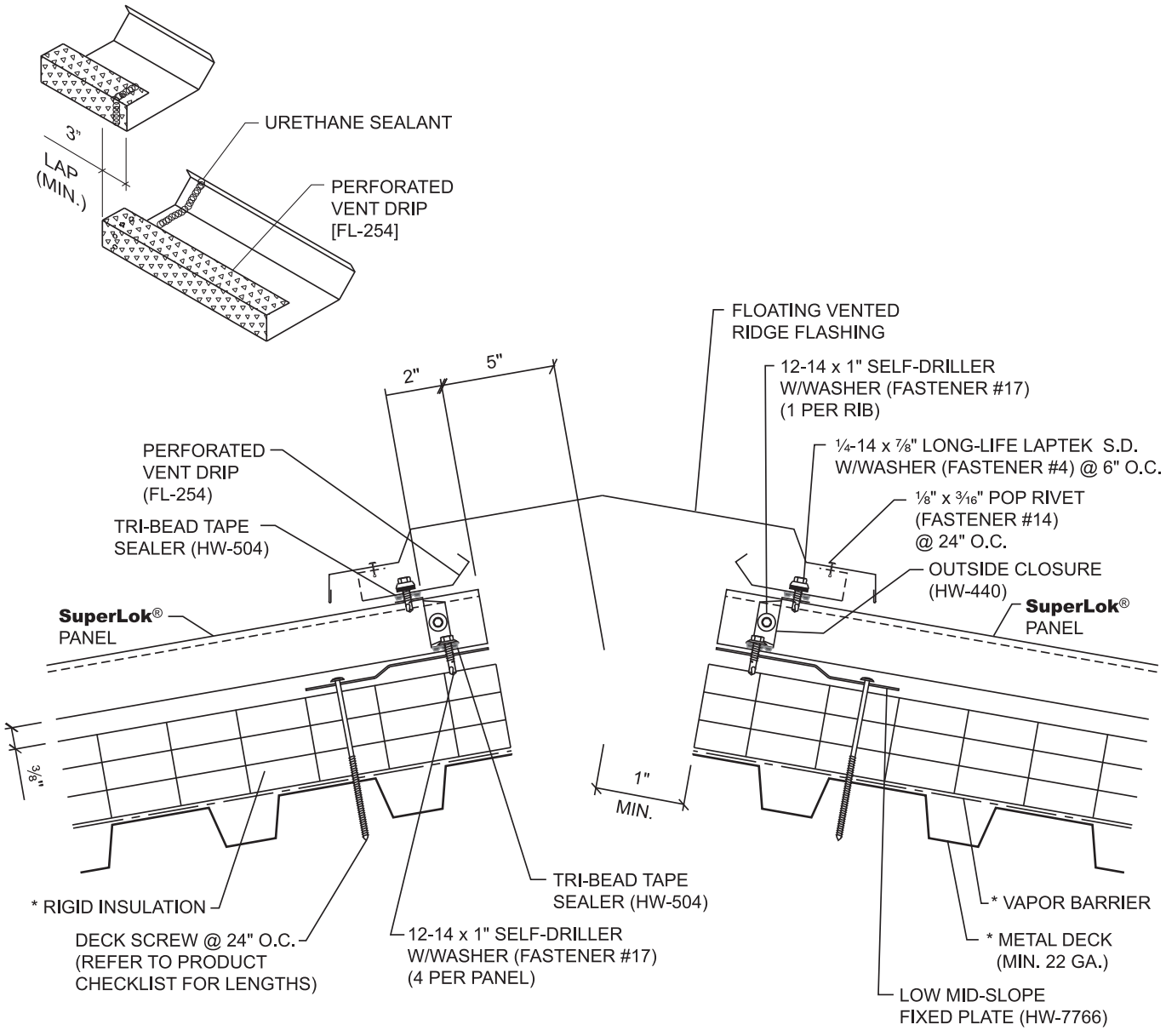

NOTES:

1. Ridge must have an offset support plate (leave opening at ridge to allow ventilation).
2. Install outside closures as shown on page SL-37.
3. Install Tri-Bead tape sealer to top leg of outside closure.
4. Attach perforated vent drip to outside closure with Fastener #4. Seal laps in vent drip with urethane sealant.
5. Attach ridge flash to vent drip with Fastener #14 at 24" O.C.

***Not by Manufacturer**

Houston, TX 877-713-6224
Adel, GA 888-446-6224
Atlanta, GA 877-512-6224
Atwater, CA 800-829-9324
Dallas, TX 800-653-6224
Indianapolis, IN 800-735-6224
Jackson, MS 800-622-4136
Lubbock, TX 800-758-6224
Memphis, TN 800-206-6224
Oklahoma City, OK 800-597-6224
Omaha, NE 800-458-6224
Phoenix, AZ 888-533-6224
Richmond, VA 800-729-6224
Rome, NY 800-559-6224
Salt Lake City, UT 800-874-2404
San Antonio, TX 800-598-6224

MBCI®
Metal Roof and Wall Systems

SuperLok® ARCHITECTURAL DETAILS

RIGID INSULATION OVER METAL DECK
RAKE

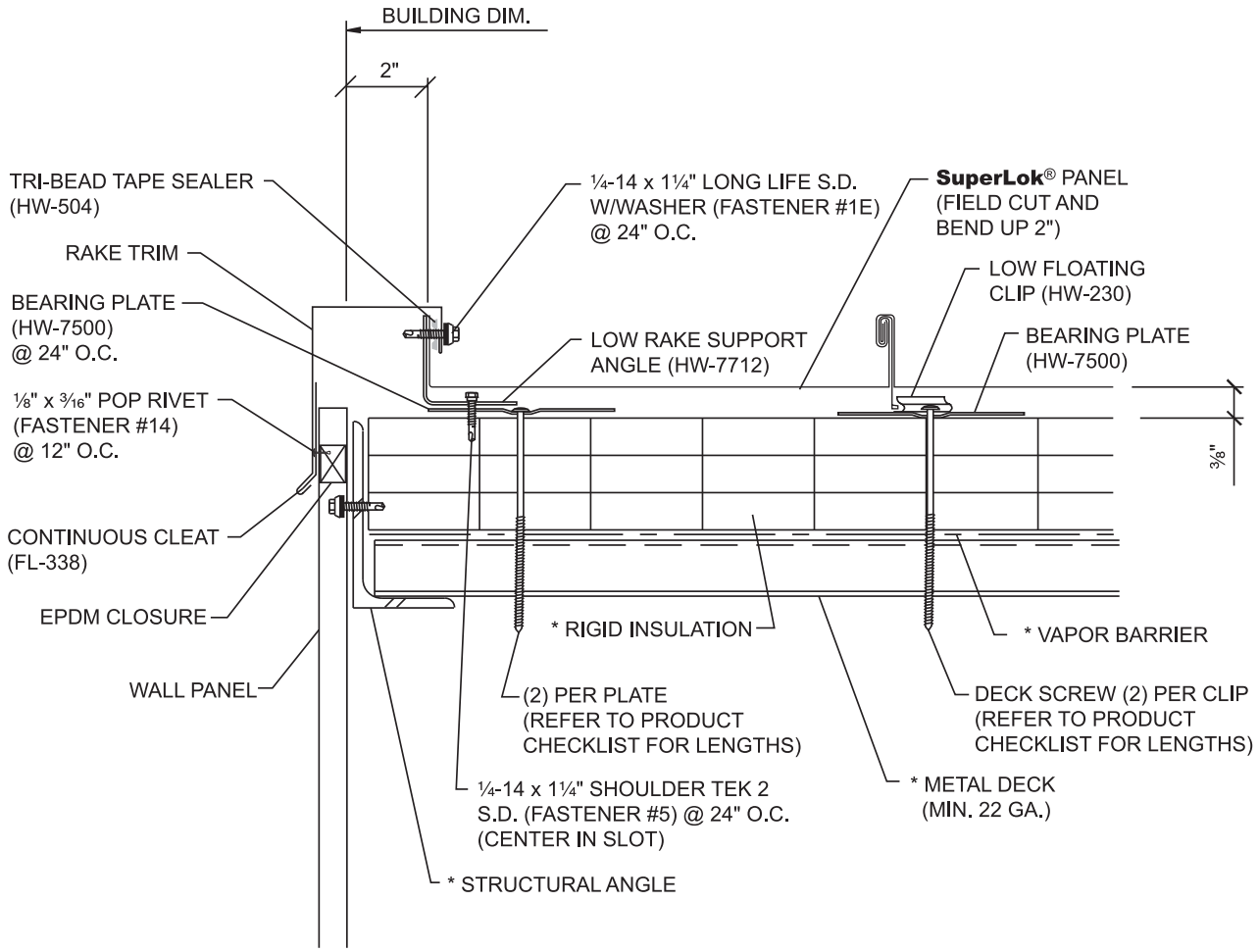

NOTES:

1. Install rake support with Fastener #5 at 2'-0" O.C.
2. Engage female leg of panel over rake support.
3. Apply Tri-Bead tape sealer to vertical leg of panel.
4. Attach continuous cleat to wall panels with Fastener #14 at each high rib.
5. Install rake trim with Fastener #1E at 2'-0" O.C. **Fastener must go through rake support.**
6. If roof finishes on module, finishing detail will be similar to starting detail except, field cut top of panel rib so only the vertical leg of panel remains. If roof finishes off module, field cut and bend last panel to fit against rake support.

***Not by Manufacturer**

MBCI®
Metal Roof and Wall Systems

Houston, TX 877-713-6224
Adel, GA 888-446-6224
Atlanta, GA 877-512-6224
Atwater, CA 800-829-9324
Dallas, TX 800-653-6224
Indianapolis, IN 800-735-6224
Jackson, MS 800-622-4136
Lubbock, TX 800-758-6224
Memphis, TN 800-206-6224
Oklahoma City, OK 800-597-6224
Omaha, NE 800-458-6224
Phoenix, AZ 888-533-6224
Richmond, VA 800-729-6224
Rome, NY 800-559-6224
Salt Lake City, UT 800-874-2404
San Antonio, TX 800-598-6224

ARCHITECTURAL DETAILS

SuperLok®

RIGID INSULATION OVER METAL DECK
PARAPET RAKE

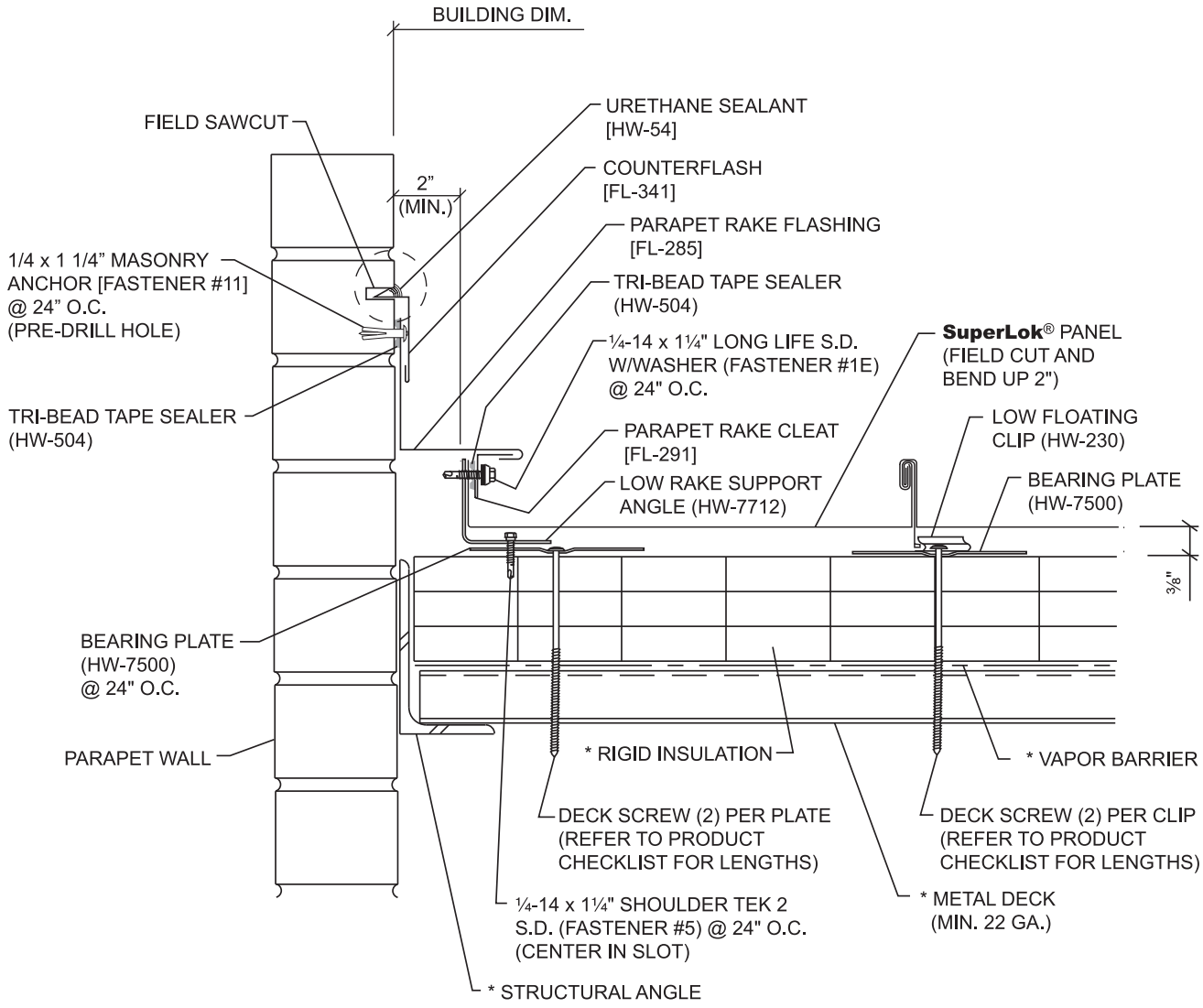

NOTES:

1. Install rake support with Fastener #5 at 2'-0" o.c.
2. Engage female leg of panel over rake support.
3. Apply Tri-Bead tape sealer to vertical leg of panel. Install parapet rake cleat to panel leg with Fastener #1E at 2'-0" o.c. Fasteners must go through rake support.
4. Install parapet rake flash by engaging open hem over parapet rake cleat. Tie vertical leg of parapet rake flash to parapet wall with Fastener #11.
5. If roof finishes on module, finishing detail will be similar to starting detail except, field cut top of panel rib so only the vertical leg of the panel remains. If roof finishes off module, field cut and bend last panel run to fit against rake support. Install tape sealer, parapet rake cleat, and parapet rake flash as previously described.
6. If parapet rake flash is not to be immediately installed, temporarily fasten panels to rake support to prevent wind damage.

Houston, TX 877-713-6224
Adel, GA 888-446-6224
Atlanta, GA 877-512-6224
Atwater, CA 800-829-9324
Dallas, TX 800-653-6224
Indianapolis, IN 800-735-6224
Jackson, MS 800-622-4136
Lubbock, TX 800-758-6224
Memphis, TN 800-206-6224
Oklahoma City, OK 800-597-6224
Omaha, NE 800-458-6224
Phoenix, AZ 888-533-6224
Richmond, VA 800-729-6224
Rome, NY 800-559-6224
Salt Lake City, UT 800-874-2404
San Antonio, TX 800-598-6224

MBCI®
Metal Roof and Wall Systems

SuperLok® ARCHITECTURAL DETAILS

RIGID INSULATION OVER METAL DECK
FIXED HIGH SIDE EAVE

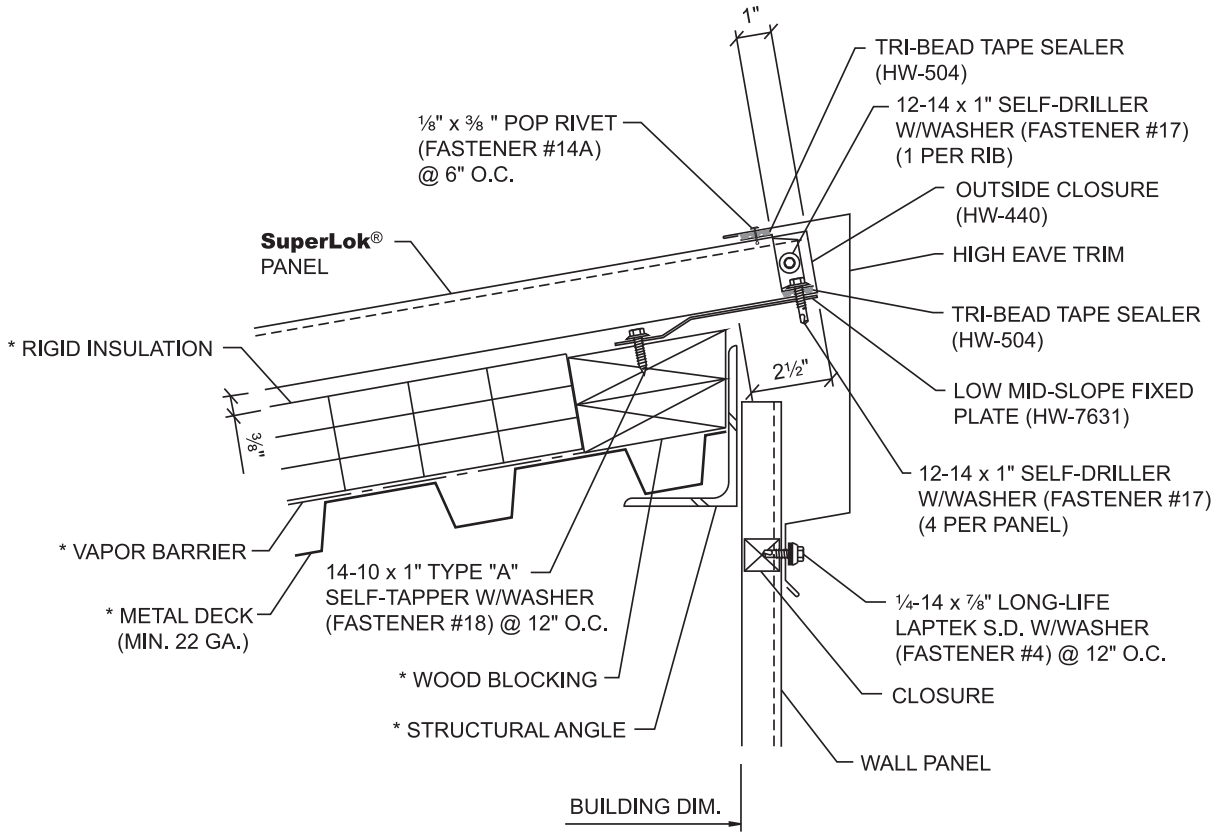

NOTES:

1. High side eave must have an offset support plate.
2. Install outside closure as shown on page SL-37.
3. Install Tri-Bead tape sealer to top leg of outside closure.
4. Attach high eave trim to outside closure with Fastener #14A at 6" O.C.

***Not by Manufacturer**

Metal Roof and Wall Systems

Houston, TX 877-713-6224
Adel, GA 888-446-6224
Atlanta, GA 877-512-6224
Atwater, CA 800-829-9324
Dallas, TX 800-653-6224
Indianapolis, IN 800-735-6224
Jackson, MS 800-622-4136
Lubbock, TX 800-758-6224
Memphis, TN 800-206-6224
Oklahoma City, OK 800-597-6224
Omaha, NE 800-458-6224
Phoenix, AZ 888-533-6224
Richmond, VA 800-729-6224
Rome, NY 800-559-6224
Salt Lake City, UT 800-874-2404
San Antonio, TX 800-598-6224

ARCHITECTURAL DETAILS

SuperLok®

RIGID INSULATION OVER METAL DECK
PARAPET FIXED HIGH SIDE EAVE

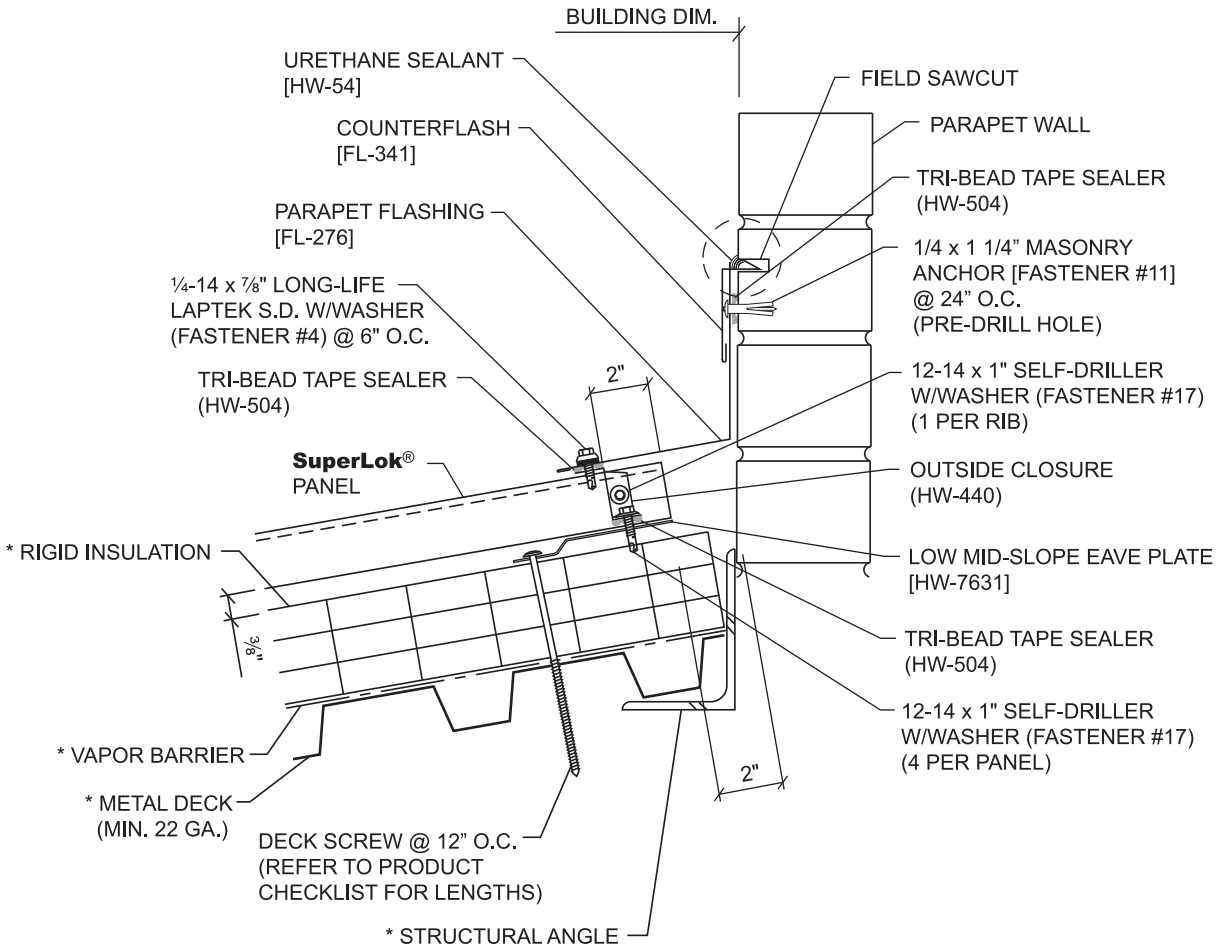

NOTES:

1. High eave must have an offset support spacer.
2. Install outside closure as shown on page BHS-37.
3. Install Tri-Bead tape sealer to top leg of outside closure.
4. Attach high eave trim to outside closure with Fastener #14 at 6" o.c.

***Not by Manufacturer**

Houston, TX 877-713-6224
Adel, GA 888-446-6224
Atlanta, GA 877-512-6224
Atwater, CA 800-829-9324
Dallas, TX 800-653-6224
Indianapolis, IN 800-735-6224
Jackson, MS 800-622-4136
Lubbock, TX 800-758-6224
Memphis, TN 800-206-6224
Oklahoma City, OK 800-597-6224
Omaha, NE 800-458-6224
Phoenix, AZ 888-533-6224
Richmond, VA 800-729-6224
Rome, NY 800-559-6224
Salt Lake City, UT 800-874-2404
San Antonio, TX 800-598-6224

MBCI®
Metal Roof and Wall Systems

SuperLok® ARCHITECTURAL DETAILS

RIGID INSULATION OVER METAL DECK
FLOATING VALLEY

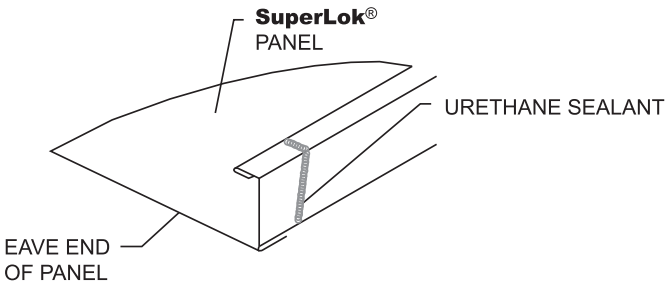

URETHANE SEALANT MUST COME IN CONTACT WITH OFFSET CLEAT TO FORM A WEATHERTIGHT SEAL

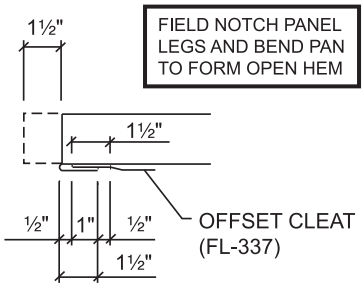

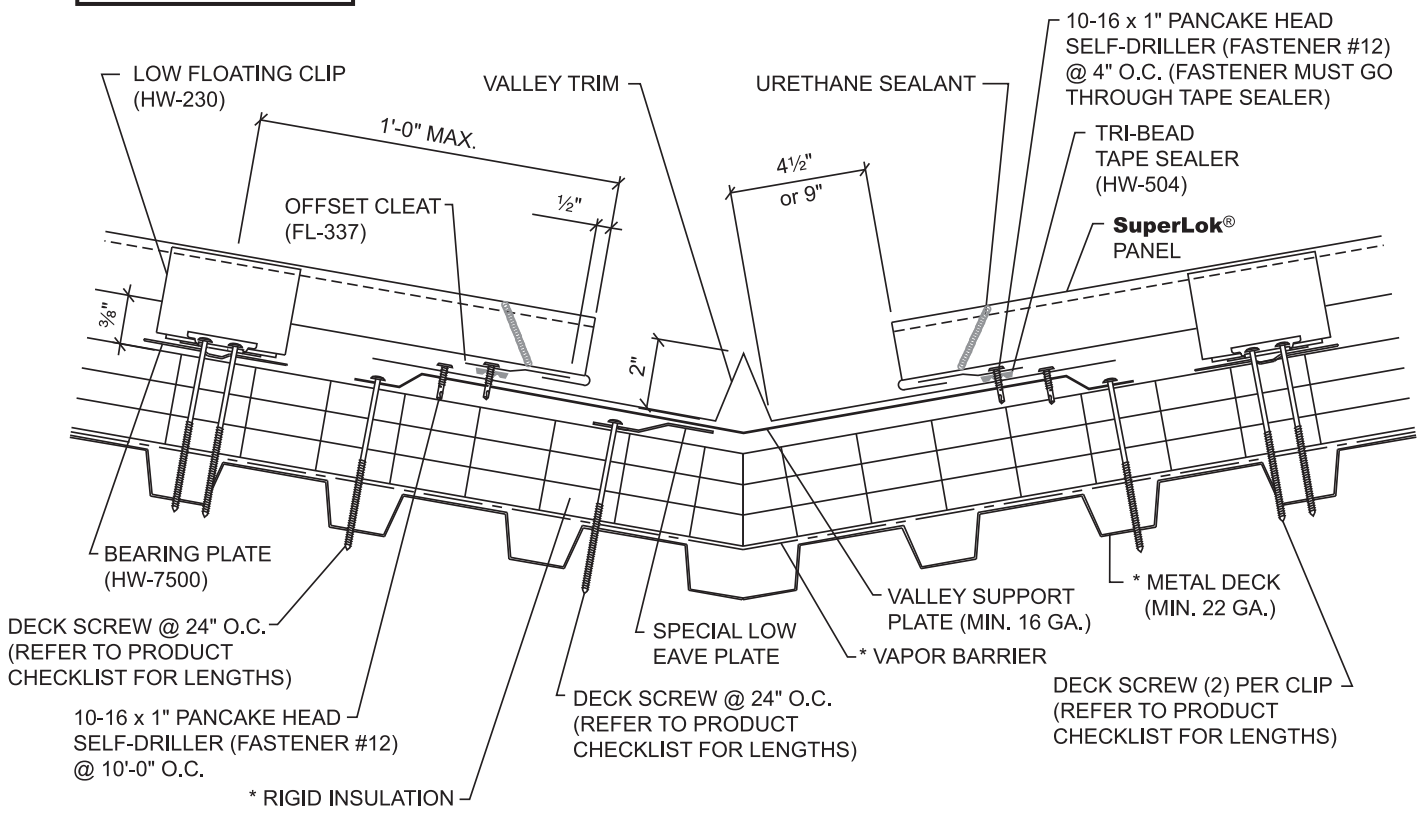

NOTES:

1. For valleys longer than 30', use extended valley trim.
2. **The hemmed panel method of attachment should be used when ridge, high side eave or endlap is fixed to the substructure. Panels must be attached at one of these points to prevent them from sliding downslope.**
3. To field hem panel, see page SL-70.
4. Add 1½" to panel length for the panel hem.
5. **Do not use this detail on roof slopes less than 3:12.**
6. **On high systems, overhang the panels ½" downslope from the 1" vertical leg of the valley trim to keep water off of upper leg of valley trim.**

MBCI®
Metal Roof and Wall Systems

Houston, TX 877-713-6224
Adel, GA 888-446-6224
Atlanta, GA 877-512-6224
Atwater, CA 800-829-9324
Dallas, TX 800-653-6224
Indianapolis, IN 800-735-6224
Jackson, MS 800-622-4136
Lubbock, TX 800-758-6224
Memphis, TN 800-206-6224
Oklahoma City, OK 800-597-6224
Omaha, NE 800-458-6224
Phoenix, AZ 888-533-6224
Richmond, VA 800-729-6224
Rome, NY 800-559-6224
Salt Lake City, UT 800-874-2404
San Antonio, TX 800-598-6224

ARCHITECTURAL DETAILS

SuperLok®

RIGID INSULATION OVER METAL DECK
FIXED HIP

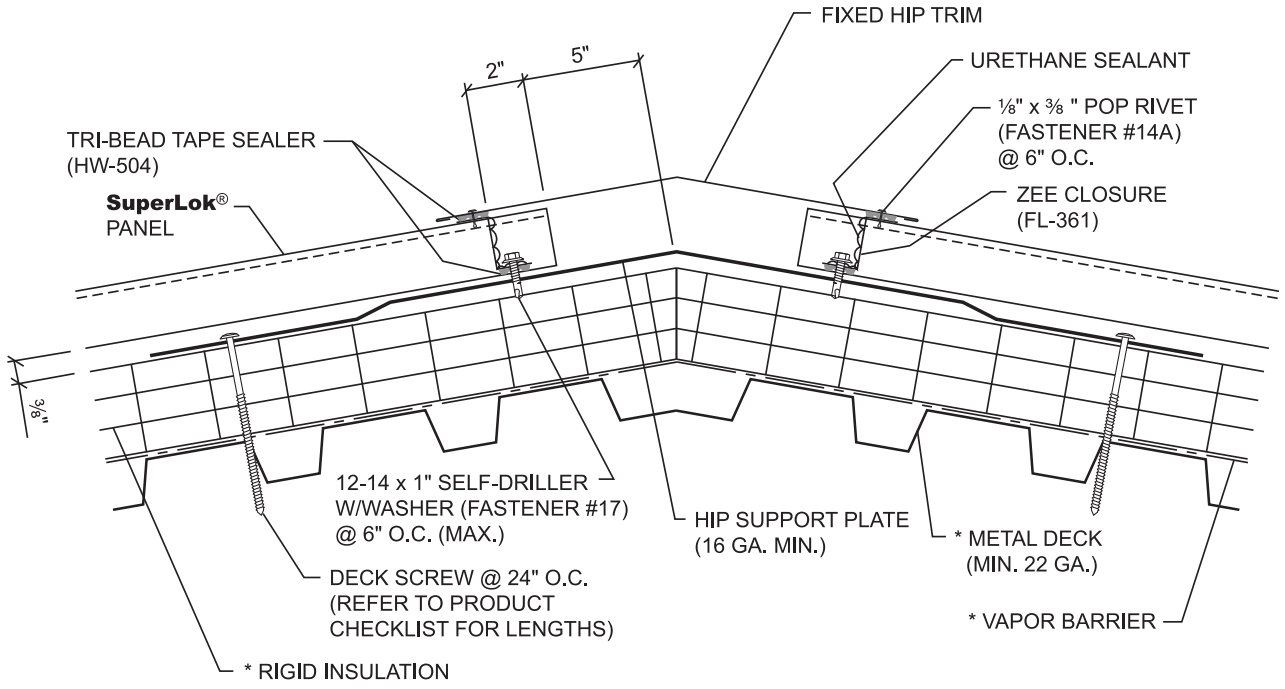

NOTES:

1. Hip must have an offset support plate to reinforce panels between purlins.
2. Bevel cut and install panels to follow slope of hip.
3. Install Tri-Bead tape sealer to pans of panels, running parallel to the hip. Center of tape sealer should be 1½" from end of panels.
4. Bevel cut and install "Z" closures to panels and hip plate with Fastener #17 at 6" O.C. Vertical leg of "Z" closure should be 4" from center of hip. Seal sides and top of "Z" closures to panel seams with urethane sealant.
5. Attach ridge/hip flash to outside closures with Fastener #14A at 6" O.C.

***Not by Manufacturer**

Houston, TX 877-713-6224
Adel, GA 888-446-6224
Atlanta, GA 877-512-6224
Atwater, CA 800-829-9324
Dallas, TX 800-653-6224
Indianapolis, IN 800-735-6224
Jackson, MS 800-622-4136
Lubbock, TX 800-758-6224
Memphis, TN 800-206-6224
Oklahoma City, OK 800-597-6224
Omaha, NE 800-458-6224
Phoenix, AZ 888-533-6224
Richmond, VA 800-729-6224
Rome, NY 800-559-6224
Salt Lake City, UT 800-874-2404
San Antonio, TX 800-598-6224

MBCI®
Metal Roof and Wall Systems

PROPER HANDLING, STORAGE AND MAINTENANCE OF PAINTED AND GALVALUME PLUS® PANELS

PANEL HANDLING

- All panel bundles must be inspected during unloading and carrier advised immediately if damage is noted.
- Never unload or move panel bundles that have been opened without adequately clamping them. Without the banding to hold the bundle stable, panels may shift during unloading or movement, causing the bundle to fall.
- Never use wire slings to unload or move panel bundles.
- When unloading or moving panel bundles over 20' long, a spreader bar may be required. It is the erector's responsibility to determine the location and number of lift points required to safely unload or move panel bundles.
- When handling individual panels, always wear protective gloves. OSHA safety regulations must be followed at all times.
- When cutting panels, always wear all required safety equipment such as safety glasses and gloves. Cut panels with nibblers, shears or snips. Do not use abrasive blade saws as these will melt the Galvalume® coating causing the panel to edge rust which will void the Galvalume® and Paint warranties. Drilling fasteners into panels will create metal filings that will rust and create an unsightly stain. Metal filings must removed by sweeping or wiping down panels immediately after installation to avoid this occurrence.

PANEL STORAGE

- If water is permitted to enter panel bundles, it is necessary to open bundles, separate the panels and dry all surfaces.
- Store bundled panels off the ground sufficiently high to allow air circulation beneath bundle and to prevent rising water from entering bundle. Slightly elevate one end of bundle.
- Prevent rain from entering bundle by covering with tarpaulin, making provision for air circulation between draped edges of tarpaulin and the ground.
- Prolonged storage of panels in a bundle is not recommended. If conditions do not permit immediate erection, extra care should be taken to protect panels from white rust or water marks. If panels have not been erected within three weeks of receipt, the panels should be removed from the bundle for inspection. Condensation may cause damage to panels. The manufacturer's Paint and Galvalume® warranties do not cover damage caused by improper panel storage.

PANEL MAINTENANCE

- Never allow Galvalume® panels to come into contact with or water runoff from dissimilar materials such as copper, lead, or graphite. These materials will cause galvanic corrosion of the panels and will void the Galvalume® warranty. This includes treated wood and AC condensate, both of which contain copper compounds. This also applies to painted panels.
- Always use long life fasteners in all exposed fastener applications. Non long life fasteners can rust through the panel at each exposed fastener location. Use of non long life fasteners in exposed applications will void the Galvalume® and Paint warranties.
- Panels should be protected against exposure to masonry products, strong acids or bases and solvents. Exposure to these agents may etch or stain Galvalume Plus® panels and cause painted panels to blister or peel.

Houston, TX 877-713-6224
Adel, GA 888-446-6224
Atlanta, GA 877-512-6224
Atwater, CA 800-829-9324
Dallas, TX 800-653-6224
Indianapolis, IN 800-735-6224
Jackson, MS 800-622-4136
Lubbock, TX 800-758-6224
Memphis, TN 800-206-6224
Oklahoma City, OK 800-597-6224
Omaha, NE 800-458-6224
Phoenix, AZ 888-533-6224
Richmond, VA 800-729-6224
Rome, NY 800-559-6224
Salt Lake City, UT 800-874-2404
San Antonio, TX 800-598-6224

- Never allow anyone to apply any coating or patching material to the panel surface. These products may contain chemicals that will adversely affect the Galvalume Plus® or paint coating. Also, water may become trapped between the coating material and the panel, causing premature corrosion.

If you have any question as to proper methods to use in the handling, storage or maintenance of these panels, call your nearest manufacturer representative.

NOTICE

Uniform visual appearance of Galvalume Plus® coated panels cannot be guaranteed. The Galvalume Plus® coating is subject to variances in spangle from coil to coil which may result in a noticeable shade variation in installed panels. The Galvalume Plus® coating is also subject to differential weathering after panel installation. Panels may appear to be different shades due to this weathering characteristic. If uniform visual appearance is required, the manufacturer recommends that our prepainted Signature® 200 or Signature® 300 panels be used in lieu of Galvalume Plus®. Shade variations in panels manufactured from Galvalume Plus® coated material do not diminish the structural integrity of the product. These shade variations should be anticipated and are not a cause for rejection.

Houston, TX 877-713-6224
Adel, GA 888-446-6224
Atlanta, GA 877-512-6224
Atwater, CA 800-829-9324
Dallas, TX 800-653-6224
Indianapolis, IN 800-735-6224
Jackson, MS 800-622-4136
Lubbock, TX 800-758-6224
Memphis, TN 800-206-6224
Oklahoma City, OK 800-597-6224
Omaha, NE 800-458-6224
Phoenix, AZ 888-533-6224
Richmond, VA 800-729-6224
Rome, NY 800-559-6224
Salt Lake City, UT 800-874-2404
San Antonio, TX 800-598-6224

MBCI®
Metal Roof and Wall Systems

NOTES

MBCI®
Metal Roof and Wall Systems

Houston, TX 877-713-6224
Adel, GA 888-446-6224
Atlanta, GA 877-512-6224
Atwater, CA 800-829-9324
Dallas, TX 800-653-6224
Indianapolis, IN 800-735-6224
Jackson, MS 800-622-4136
Lubbock, TX 800-758-6224
Memphis, TN 800-206-6224
Oklahoma City, OK 800-597-6224
Omaha, NE 800-458-6224
Phoenix, AZ 888-533-6224
Richmond, VA 800-729-6224
Rome, NY 800-559-6224
Salt Lake City, UT 800-874-2404
San Antonio, TX 800-598-6224

NOTES

Houston, TX 877-713-6224
Adel, GA 888-446-6224
Atlanta, GA 877-512-6224
Atwater, CA 800-829-9324
Dallas, TX 800-653-6224
Indianapolis, IN 800-735-6224
Jackson, MS 800-622-4136
Lubbock, TX 800-758-6224
Memphis, TN 800-206-6224
Oklahoma City, OK 800-597-6224
Omaha, NE 800-458-6224
Phoenix, AZ 888-533-6224
Richmond, VA 800-729-6224
Rome, NY 800-559-6224
Salt Lake City, UT 800-874-2404
San Antonio, TX 800-598-6224

MBCI®
Metal Roof and Wall Systems

NOTES

Metal Roof and Wall Systems

For current information, visit our Website at www.mbci.com.

Descriptions and specifications contained herein were in effect at the time this publication was approved for printing. In a continuing effort to refine and improve products, MBCI reserves the right to discontinue products at any time or change specifications and/or designs without incurring obligation. To ensure you have the latest information available, please inquire or visit our website at www.mbci.com. Application details are for illustration purposes only and may not be appropriate for all environmental conditions, building designs or panel profiles. Projects should be designed to conform to applicable building codes, regulations and accepted industry practices. If there is a conflict between this manual and project erection drawings, the erection drawings will take precedence.

Houston, TX
14031 West Hardy
P.O. Box 38217
Houston, TX 77238
877-713-6224

Adel, GA
1601 Rogers Road
P.O. Box 1107
Adel, GA 31620
888-446-6224

Atlanta, GA
2280 Monier Avenue
P.O. Box 44729
Atlanta, GA 30336
877-512-6224

Atwater, CA
550 Industry Way
P.O. Box 793
Atwater, CA 95301
800-829-9324

Dallas, TX
1804 Jack McKay Blvd.
P.O. Box 1210
Ennis, TX 75120
800-653-6224

Indianapolis, IN
1780 McCall Drive
P.O. Box 657
Shelbyville, IN 46176
800-735-6224

Jackson, MS
201 Apache Drive
P.O. Box 720100
Jackson, MS 39272
800-622-4136

Lubbock, TX
5711 East FM-40
P.O. Box 10133
Lubbock, TX 79408
800-758-6224

Memphis, TN
300 Highway 51 North
P.O. Box 366
Hernando, MS 38632
800-206-6224

Oklahoma City, OK
7000 S. Eastern Avenue
P.O. Box 95998
Oklahoma City, OK 73143
800-597-6224

Omaha, NE
1011 Ellison Avenue
Omaha, NE 68119
800-458-6224

Phoenix, AZ
660 South 91st Avenue
P.O. Box 739
Tolleson, AZ 85353
888-533-6224

Richmond, VA
801 South Avenue
P.O. Box 239
Colonial Heights, VA 23834
800-729-6224

Rome, NY
6168 State Route 233
P.O. Box 4141
Rome, NY 13442
800-559-6224

Salt Lake City, UT
1155 West 2300 North
P.O. Box 16027
Salt Lake City, UT 84116
800-874-2404

San Antonio, TX
8677 I-10 East
P.O. Box 69
Converse, TX 78109
800-598-6224

ENERGY STAR PARTNER

Litho in U.S.A. 11-11/5M